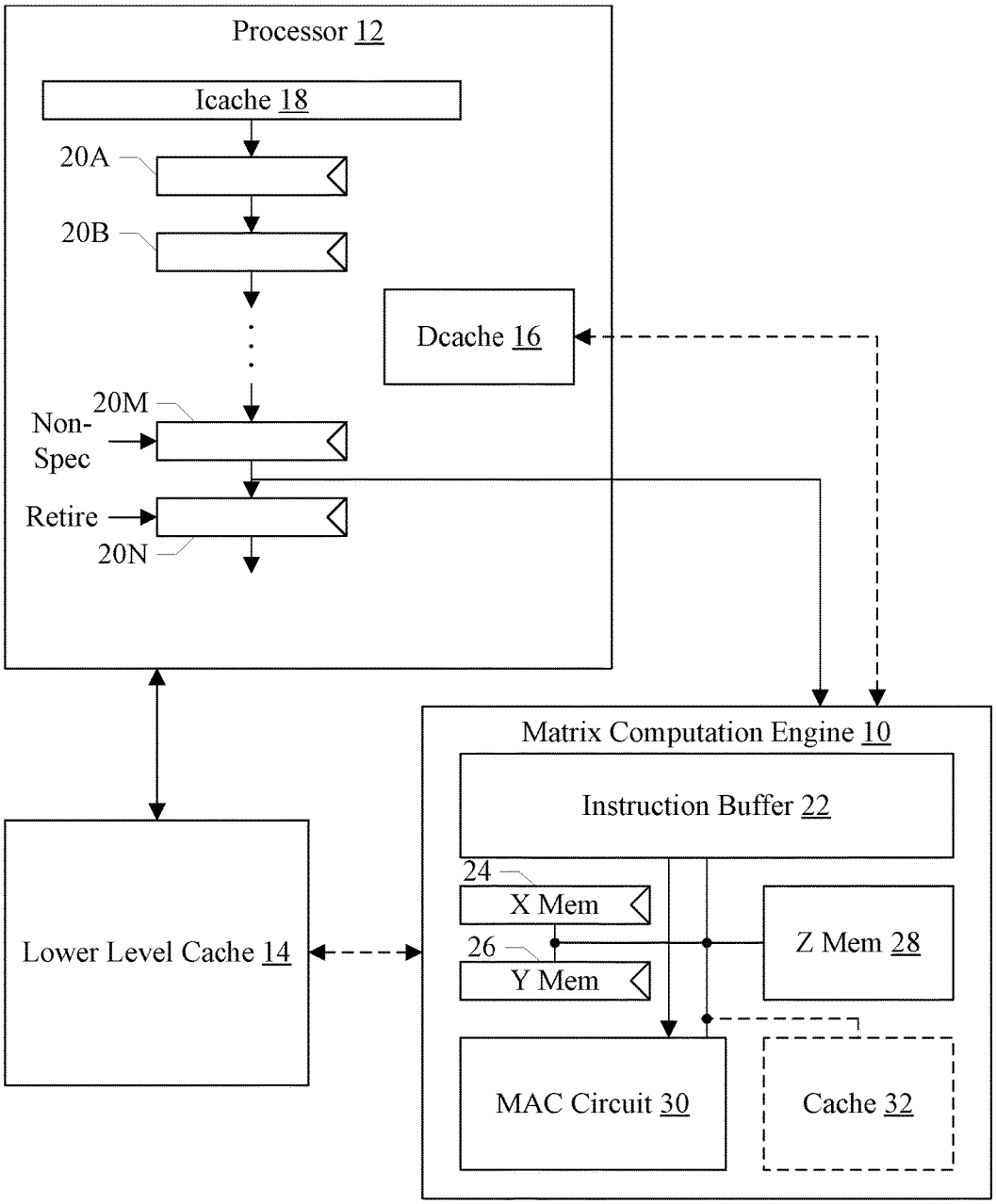
Processor 12
Icache 18
20A
20B
Dcache 16
20M
Non-Spec
Retire
20N
Matrix Computation Engine 10
Instruction Buffer 22
24
X Mem
26
Y Mem
Z Mem 28
Lower Level Cache 14
MAC Circuit 30
Cache 32

Fig. 1