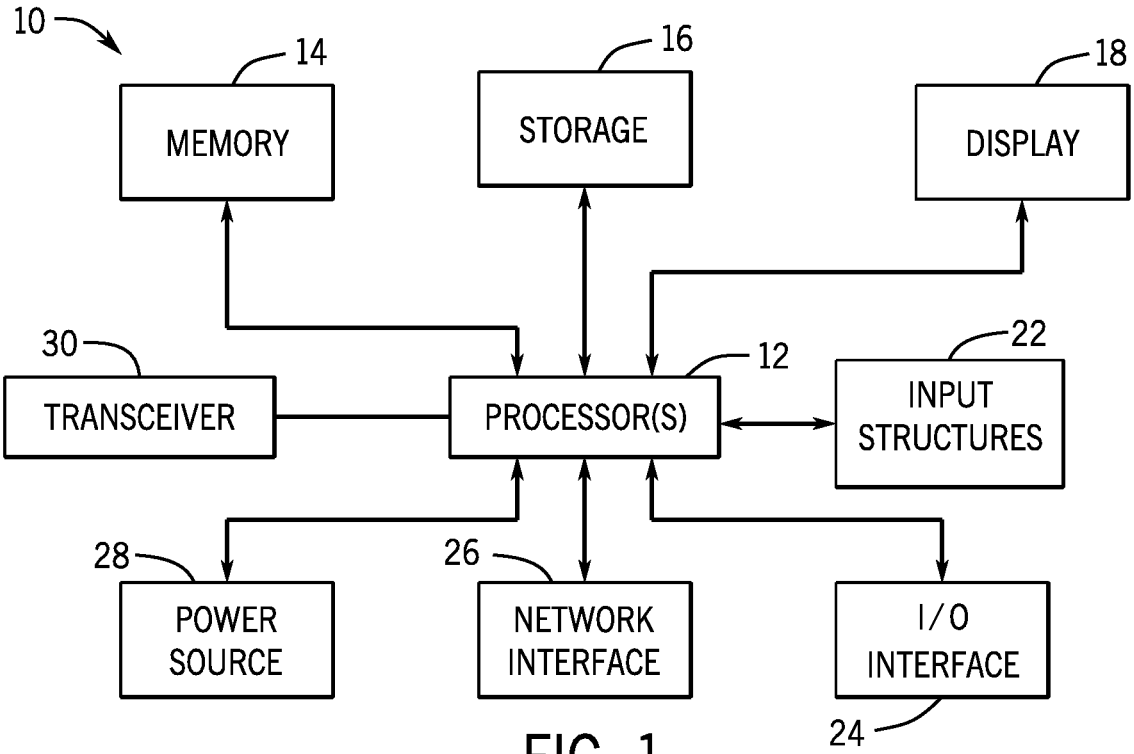
10
14
MEMORY
16
STORAGE
18
DISPLAY
30
TRANSCEIVER
12
PROCESSOR(S)
22
INPUT STRUCTURES
28
POWER SOURCE
26
NETWORK INTERFACE
I/O INTERFACE
24

FIG. 1

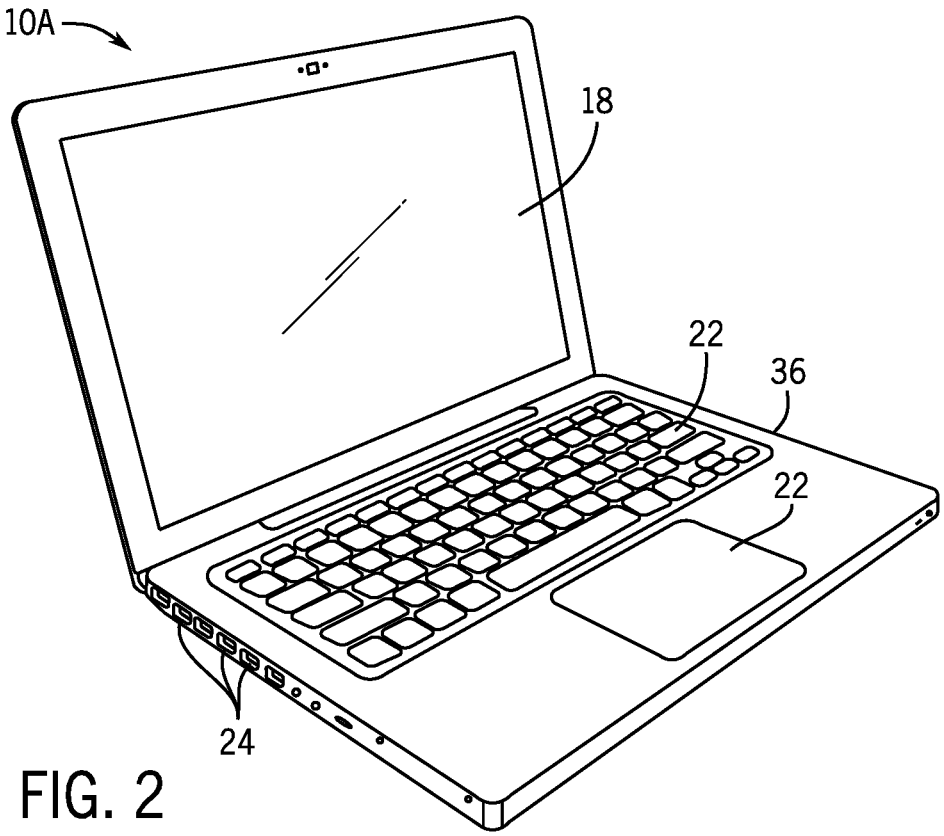
10A
18
22
36
22
24

FIG. 2