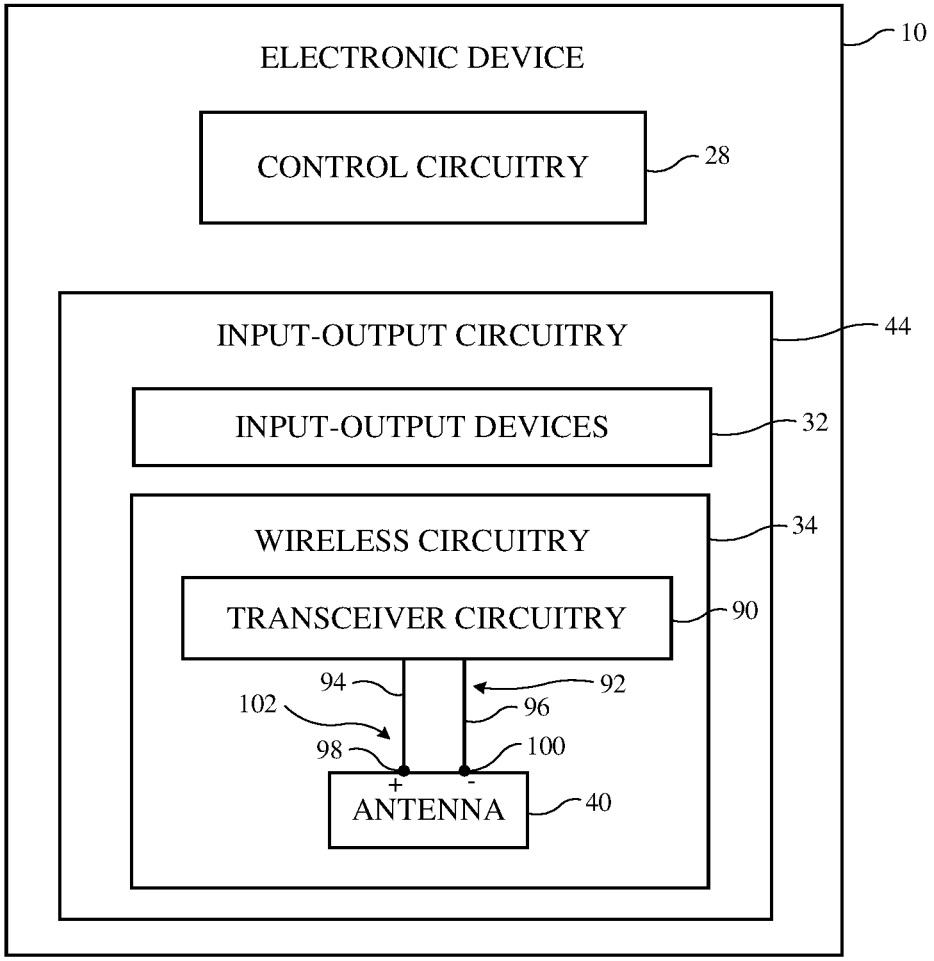
ELECTRONIC DEVICE
10
CONTROL CIRCUITRY
28
INPUT-OUTPUT CIRCUITRY
44
INPUT-OUTPUT DEVICES
32
WIRELESS CIRCUITRY
34
TRANSCEIVER CIRCUITRY
90
94
92
102
96
98
100
+
-
ANTENNA
40

FIG. 1