US 20090056343A1

(19) United States

(12) Patent Application Publication

(10) Pub. No.: US 2009/0056343 A1

(43) Pub. Date: Mar. 5, 2009

Suciu et al.

(54) ENGINE MOUNTING CONFIGURATION FOR A TURBOFAN GAS TURBINE ENGINE

(76) Inventors: **Gabriel L. Suciu**, Glastonbury, CT (US); **Jon A. Marx**, Manchester, CT (US); **Brian D. Merry**, Andover, CT (US); **Craig A. Nordeen**, Manchester, CT (US); **Christopher M. Dye**, South Windsor, CT (US)

Correspondence Address:
CARLSON, GASKEY & OLDS/PRATT & WHITNEY
400 WEST MAPLE ROAD, SUITE 350
BIRMINGHAM, MI 48009 (US)

(21) Appl. No.: **11/832,107**

(22) Filed: **Aug. 1, 2007**

Publication Classification

(51) **Int. Cl.**
F02C 7/20 (2006.01)
B23P 11/00 (2006.01)

(52) **U.S. Cl.** **60/797**; 29/428

(57) **ABSTRACT**
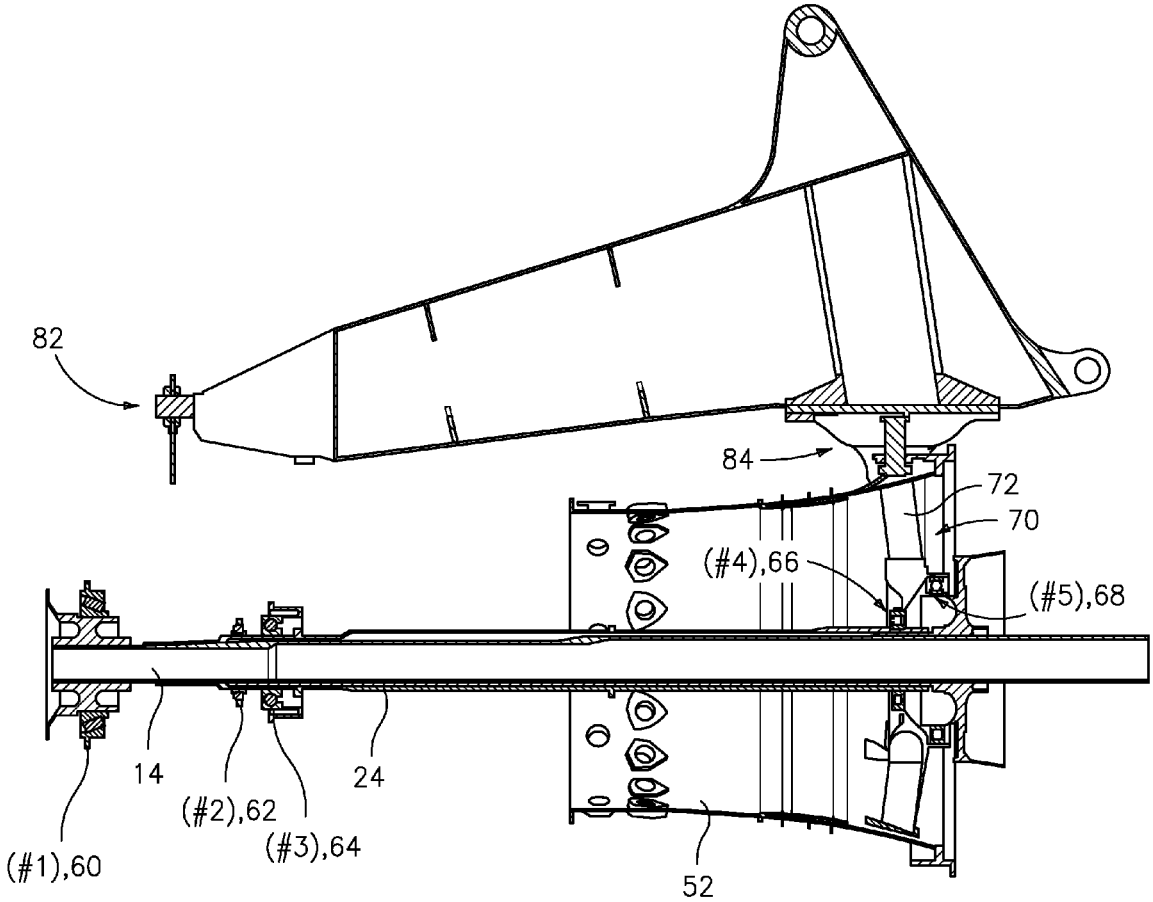
An engine mounting configuration reacts engine thrust at an aft mount. The engine mounting configuration reduces backbone bending of the engine, intermediate case distortion and frees-up space within the core nacelle.