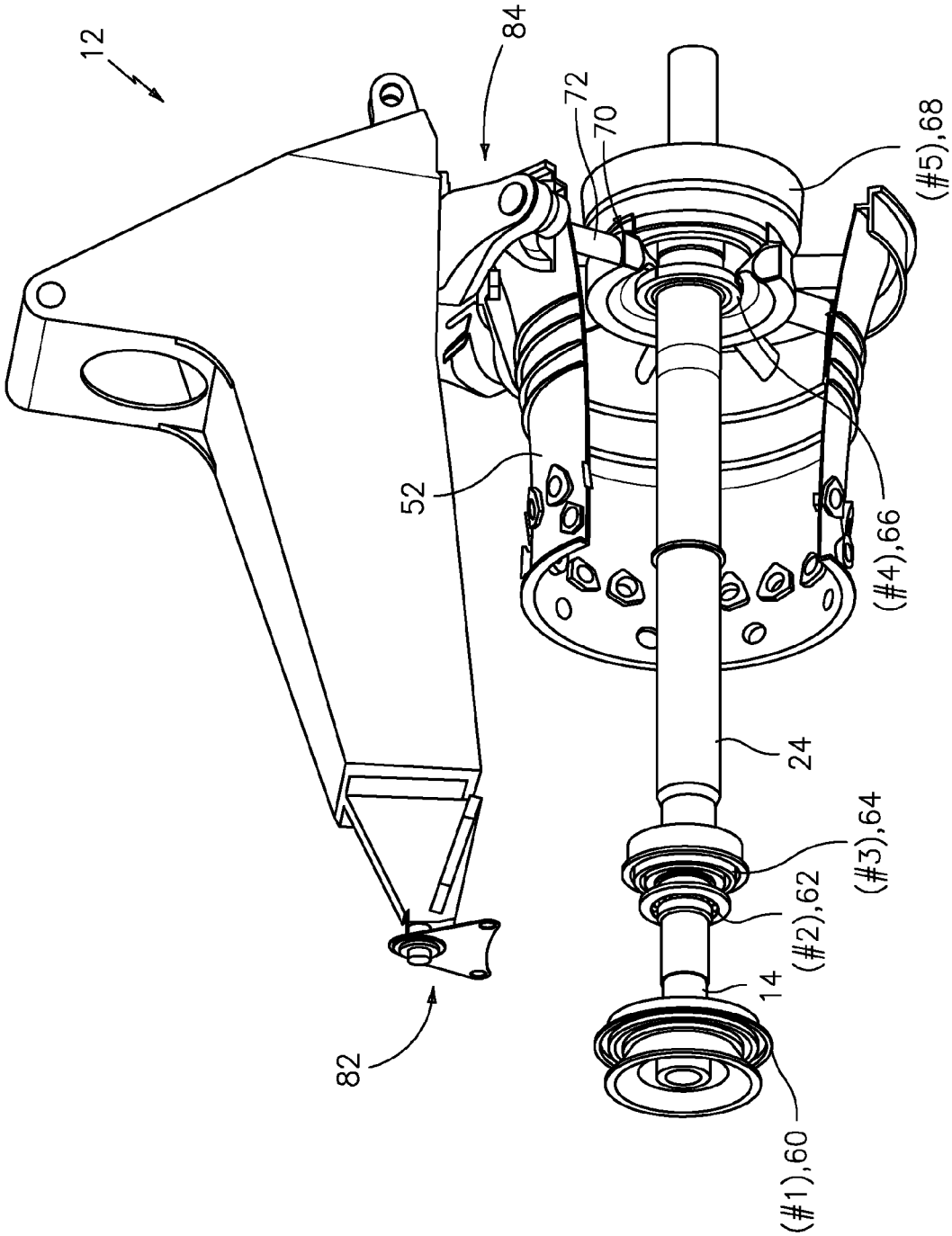

FIG. 1D