US 20190292643A1

(19) United States

(12) Patent Application Publication

Yurko et al.

(10) Pub. No.: US 2019/0292643 A1

(43) Pub. Date: Sep. 26, 2019

(54) **THERMOPLASTIC FORMING METALLIC GLASS TEXTURES FROM GLASS MOLDS**

(71) Applicant: **Apple Inc.**, Cupertino, CA (US)

(72) Inventors: **James A. Yurko**, Saratoga, CA (US); **Zechariah D. Feinberg**, San Francisco, CA (US)

(21) Appl. No.: **16/362,433**

(22) Filed: **Mar. 22, 2019**

Related U.S. Application Data

(60) Provisional application No. 62/646,702, filed on Mar. 22, 2018.

Publication Classification

(51) **Int. Cl.**

C22F 1/18	(2006.01)
C22F 1/14	(2006.01)
C22C 45/10	(2006.01)
C22C 45/00	(2006.01)

(52) **U.S. Cl.**

CPC ***C22F 1/186*** (2013.01); ***C22F 1/14*** (2013.01); *C22C 2200/02* (2013.01); ***C22C 45/003*** (2013.01); ***C22C 45/10*** (2013.01)

(57) **ABSTRACT**
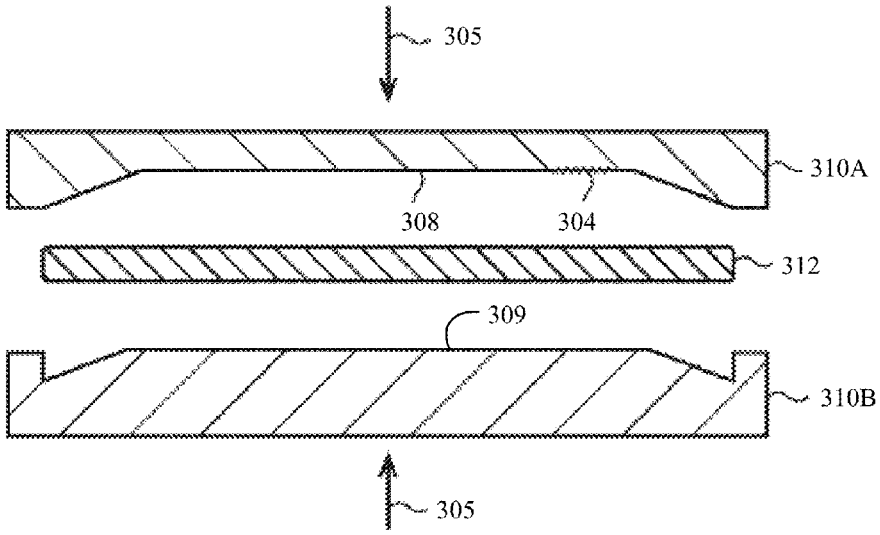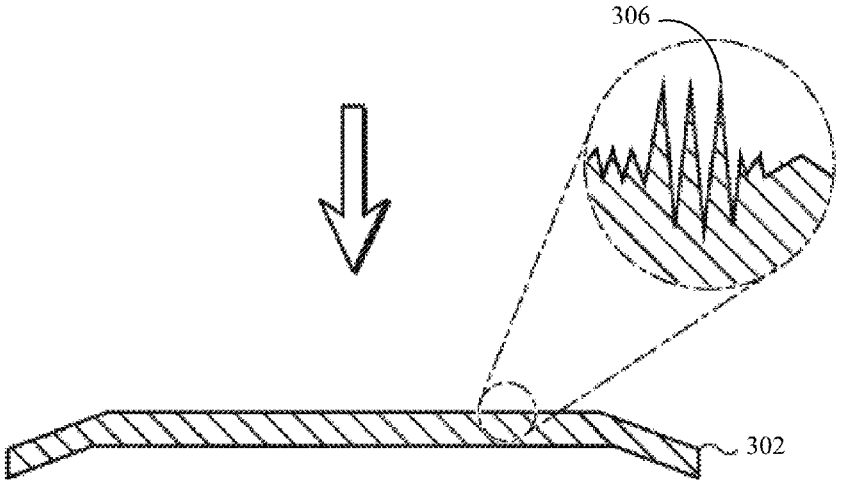
A thermoplastic forming method is provided for replicating the fine texture from a glass (e.g., silicate) mold.