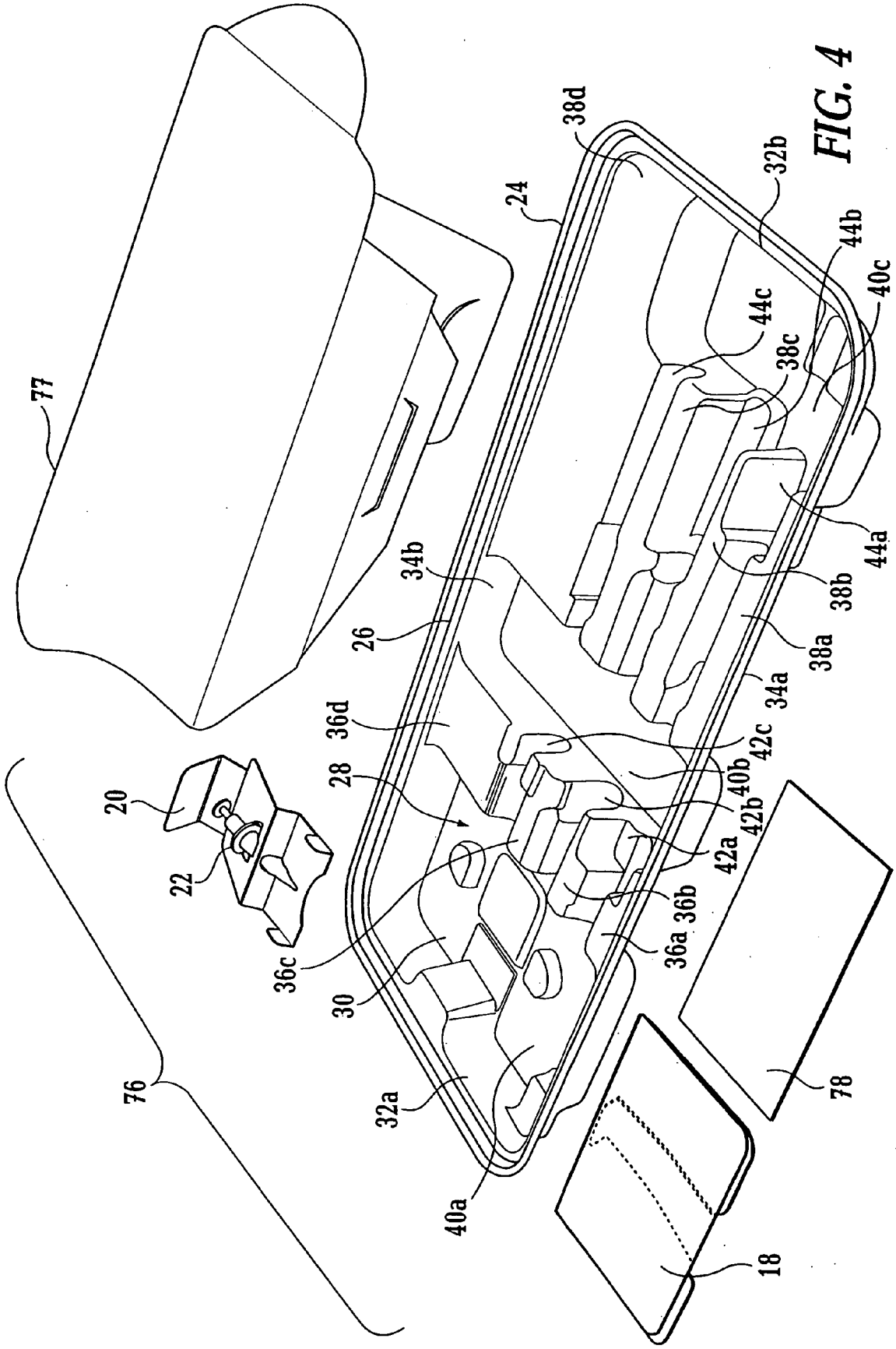
77
76
20
22
36c
30
32a
40a
28
36d
26
34b
24
38d
32b
44b
40c
44c
38c
44a
38b
38a
34a
42c
40b
42b
42a
36b
36a
78
18

FIG. 4