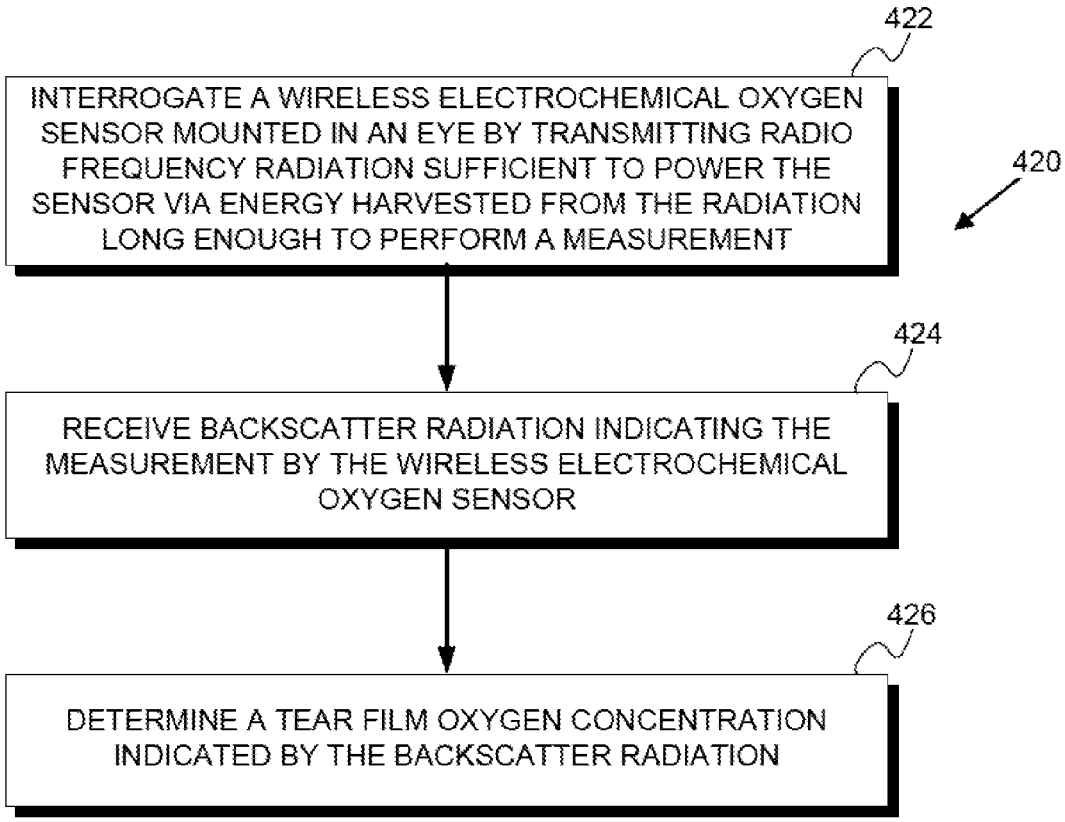
422
INTERROGATE A WIRELESS ELECTROCHEMICAL OXYGEN SENSOR MOUNTED IN AN EYE BY TRANSMITTING RADIO FREQUENCY RADIATION SUFFICIENT TO POWER THE SENSOR VIA ENERGY HARVESTED FROM THE RADIATION LONG ENOUGH TO PERFORM A MEASUREMENT
420
424
RECEIVE BACKSCATTER RADIATION INDICATING THE MEASUREMENT BY THE WIRELESS ELECTROCHEMICAL OXYGEN SENSOR
426
DETERMINE A TEAR FILM OXYGEN CONCENTRATION INDICATED BY THE BACKSCATTER RADIATION

FIG. 4B