US 20200196745A1

(19) United States
(12) Patent Application Publication
Brensinger et al.
(10) Pub. No.: US 2020/0196745 A1
(43) Pub. Date: Jun. 25, 2020

(54) **FABRIC HINGE**

(71) Applicant: **NEMO EQUIPMENT, INC.**, Dover, NH (US)

(72) Inventors: **Camon Brensinger**, Stratham, NH (US); **Zackary Kamen**, Newburyport, MA (US); **Patrick McCluskey**, Lee, NH (US)

(21) Appl. No.: **16/724,952**

(22) Filed: **Dec. 23, 2019**

Related U.S. Application Data

(62) Division of application No. 15/878,989, filed on Jan. 24, 2018, now Pat. No. 10,524,563.

(60) Provisional application No. 62/449,818, filed on Jan. 24, 2017.

Publication Classification

(51) **Int. Cl.**

A47B 3/12	(2006.01)
A47B 3/00	(2006.01)
A47B 13/00	(2006.01)
A47B 37/04	(2006.01)
F16B 12/44	(2006.01)
A47B 3/06	(2006.01)
A47B 3/08	(2006.01)
A47B 13/08	(2006.01)
A47B 3/083	(2006.01)

(52) **U.S. Cl.**

CPC ***A47B 3/12*** (2013.01); ***A47B 3/002*** (2013.01); ***A47B 13/003*** (2013.01); ***A47B 37/04*** (2013.01); ***F16B 12/44*** (2013.01); ***A47B 3/06*** (2013.01); *F16B 2012/446* (2013.01); ***A47B 13/088*** (2013.01); ***A47B 3/083*** (2013.01); *A47B 2220/0072* (2013.01); *A47B 2200/001* (2013.01); *A47B 2003/0806* (2013.01); ***A47B 3/0803*** (2013.01)

(57) **ABSTRACT**
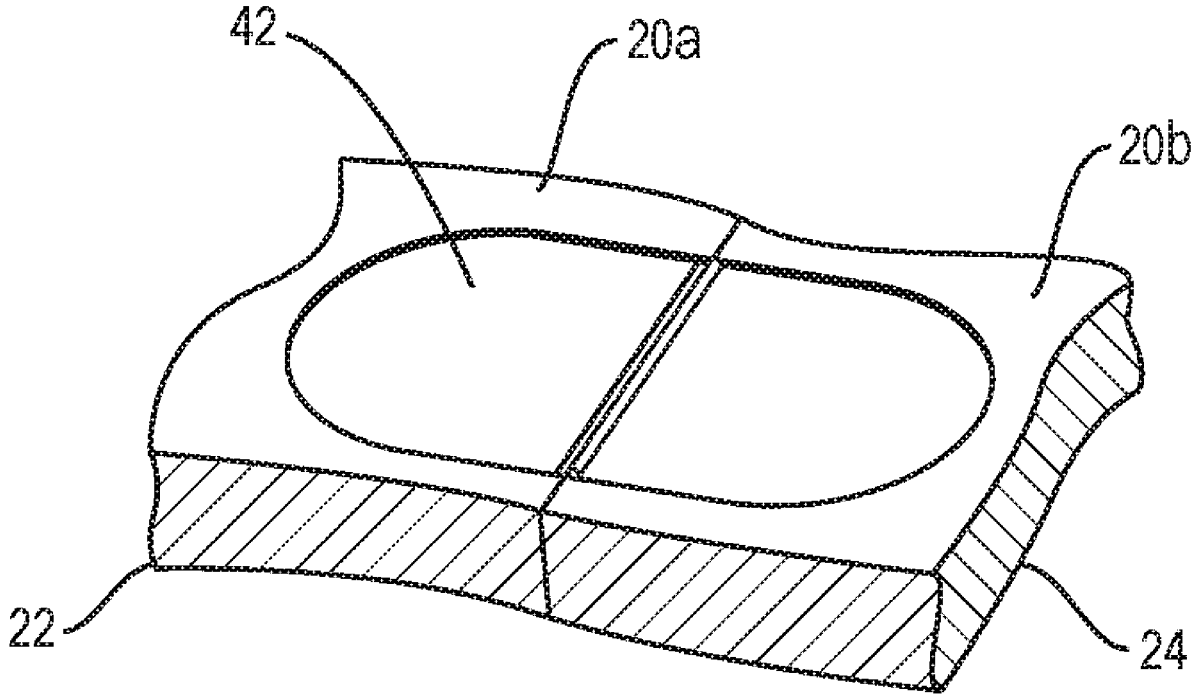
A flexible hinge created by a section of fabric material disposed between upper and lower retention pieces, for creating a hinge from a fabric member.