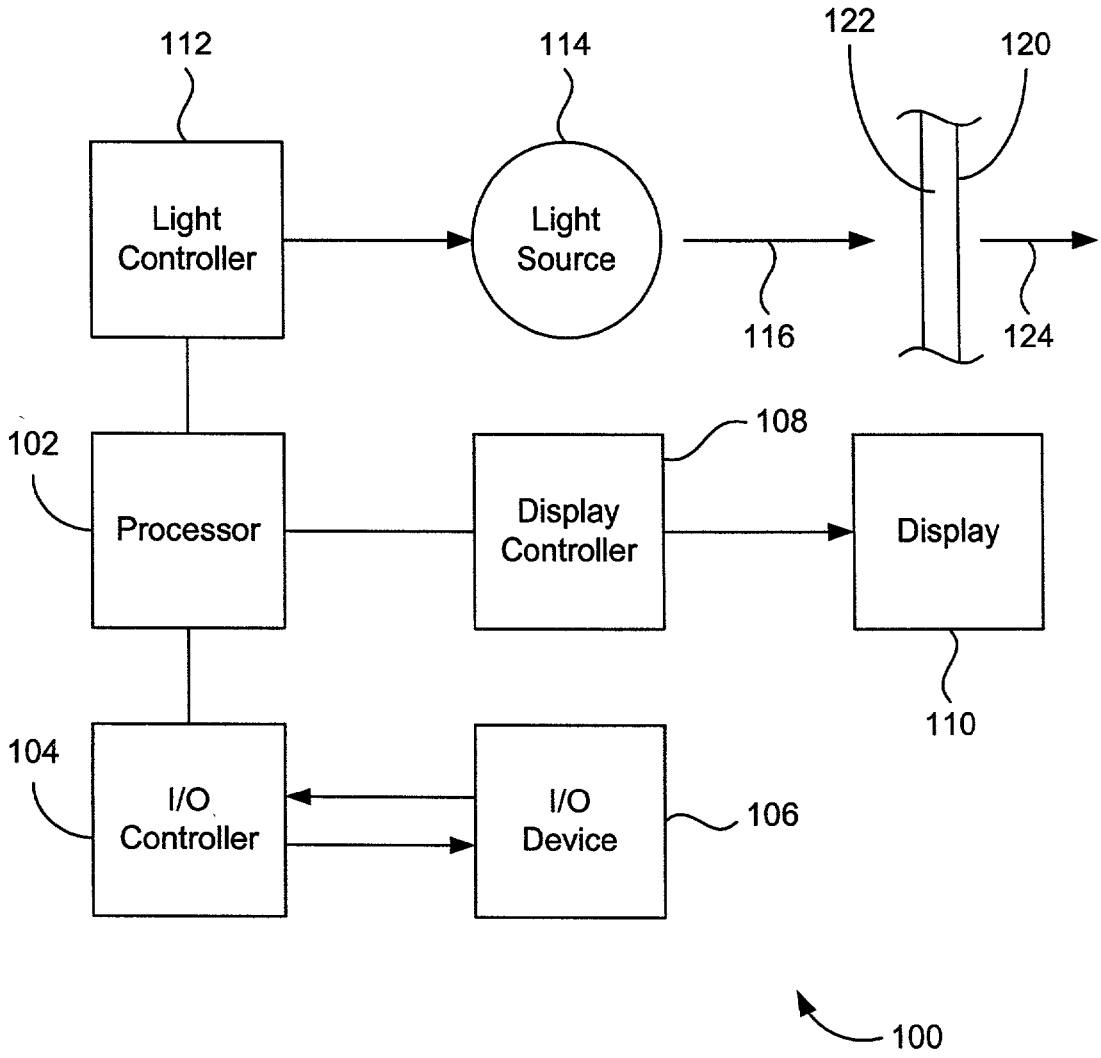
112
114
122
120
Light Controller
Light Source
116
124
102
108
Processor
Display Controller
Display
110
104
I/O Controller
I/O Device
106
100

FIG. 2