FIG. 1

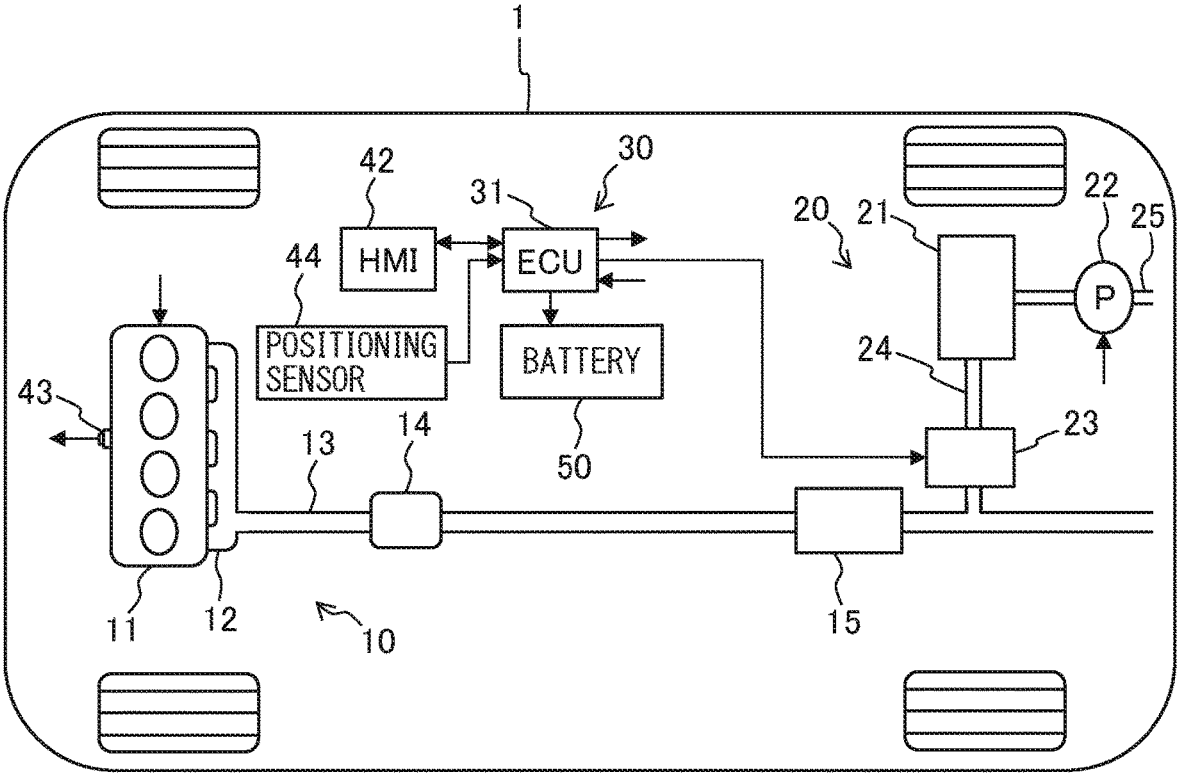
1
42
30
31
HMI
ECU
44
POSITIONING SENSOR
BATTERY
50
20
21
22
25
P
24
23
43
13
14
11
12
10
15