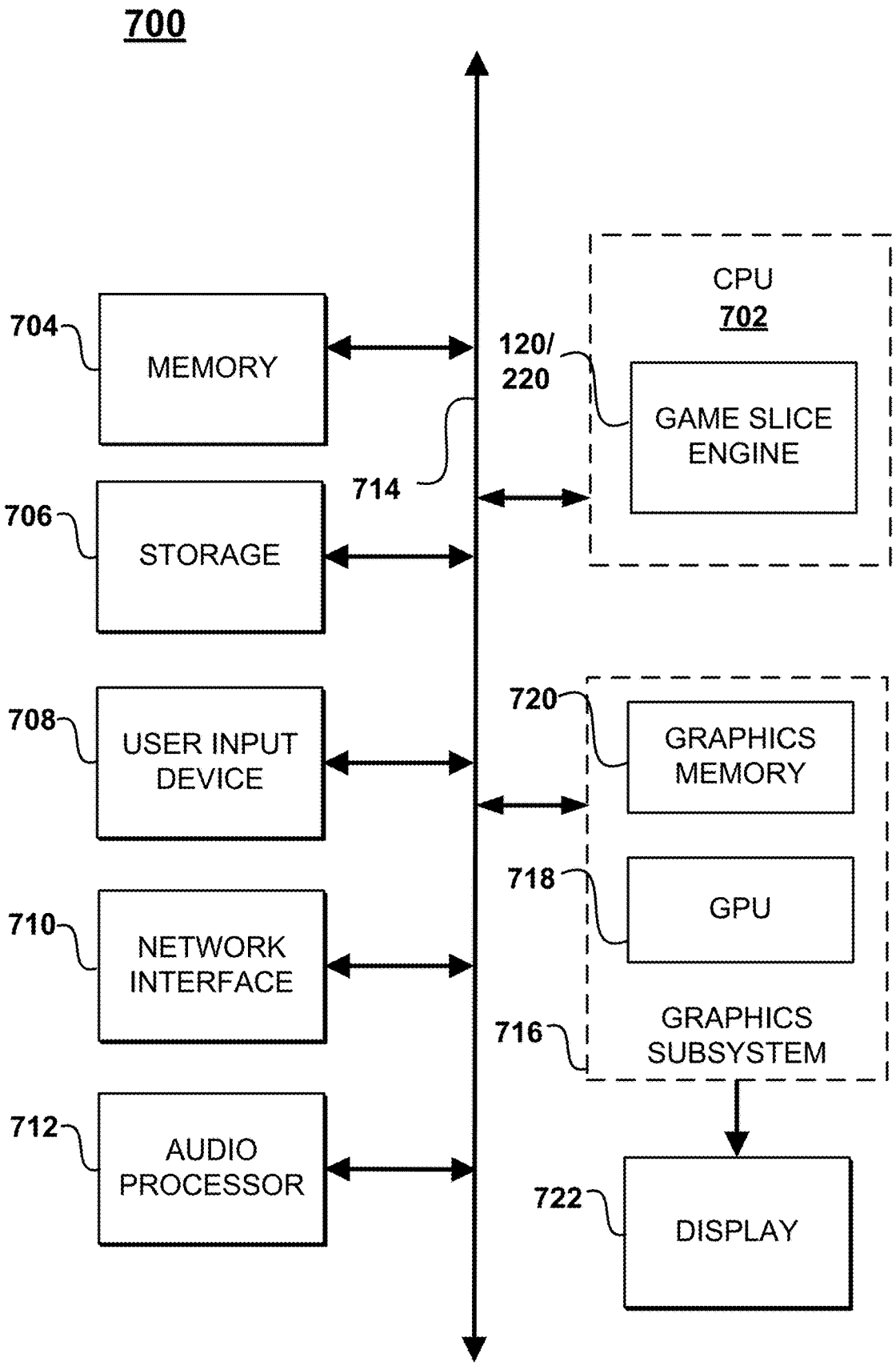
700
704
MEMORY
706
STORAGE
708
USER INPUT DEVICE
710
NETWORK INTERFACE
712
AUDIO PROCESSOR
714
CPU
702
120/
220
GAME SLICE ENGINE
720
GRAPHICS MEMORY
718
GPU
716
GRAPHICS SUBSYSTEM
722
DISPLAY

FIG. 7