FIG. 2

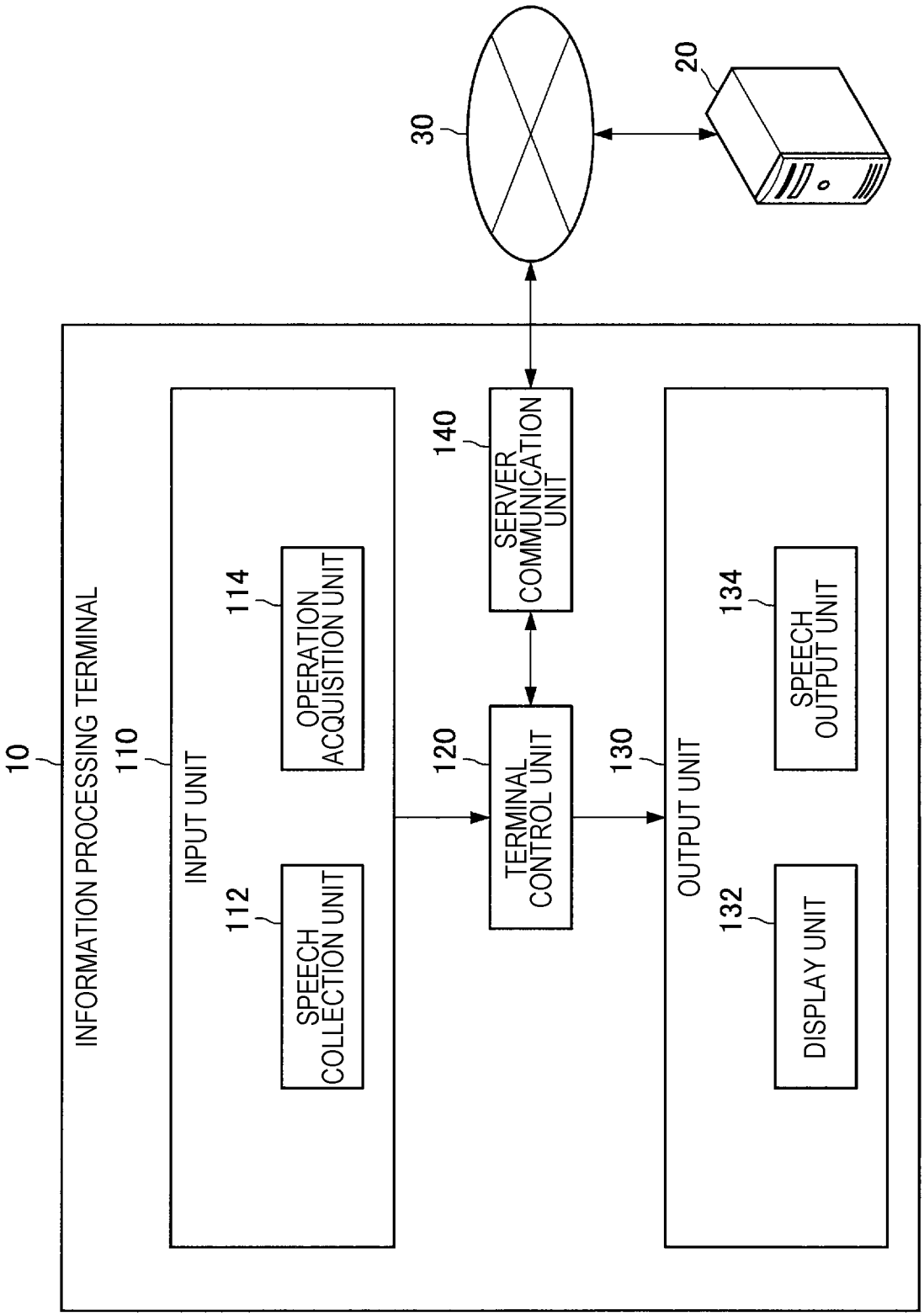
10
INFORMATION PROCESSING TERMINAL
110
INPUT UNIT
112
SPEECH COLLECTION UNIT
114
OPERATION ACQUISITION UNIT
120
TERMINAL CONTROL UNIT
140
SERVER COMMUNICATION UNIT
130
OUTPUT UNIT
132
DISPLAY UNIT
134
SPEECH OUTPUT UNIT
30
20