US 20200093652A1

(19) United States

(12) Patent Application Publication

McCormick et al.

(10) Pub. No.: US 2020/0093652 A1

(43) Pub. Date: Mar. 26, 2020

(54) **ABSORBENT ARTICLE**

(71) Applicant: **The Procter & Gamble Company**, Cincinnati, OH (US)

(72) Inventors: **Sarah Ann McCormick**, Wyoming, OH (US); **Kevin Ronald Kanya**, Liberty Township, OH (US); **Dirk Saevecke**, Wiesbaden (DE); **Sara Lyn Giovanni**, Cincinnati, OH (US)

(21) Appl. No.: **16/388,898**

(22) Filed: **Apr. 19, 2019**

Related U.S. Application Data

(63) Continuation of application No. 16/136,540, filed on Sep. 20, 2018.

Publication Classification

(51) **Int. Cl.**

A61F 13/496	(2006.01)
A61F 13/511	(2006.01)
A61F 13/15	(2006.01)

(52) **U.S. Cl.**

CPC ***A61F 13/496*** (2013.01); ***A61F 13/51113*** (2013.01); ***A61F 13/51121*** (2013.01); *A61F 2013/8408* (2013.01); ***A61F 13/15666*** (2013.01); ***A61F 13/511*** (2013.01); ***A61F 13/5116*** (2013.01)

(57) **ABSTRACT**
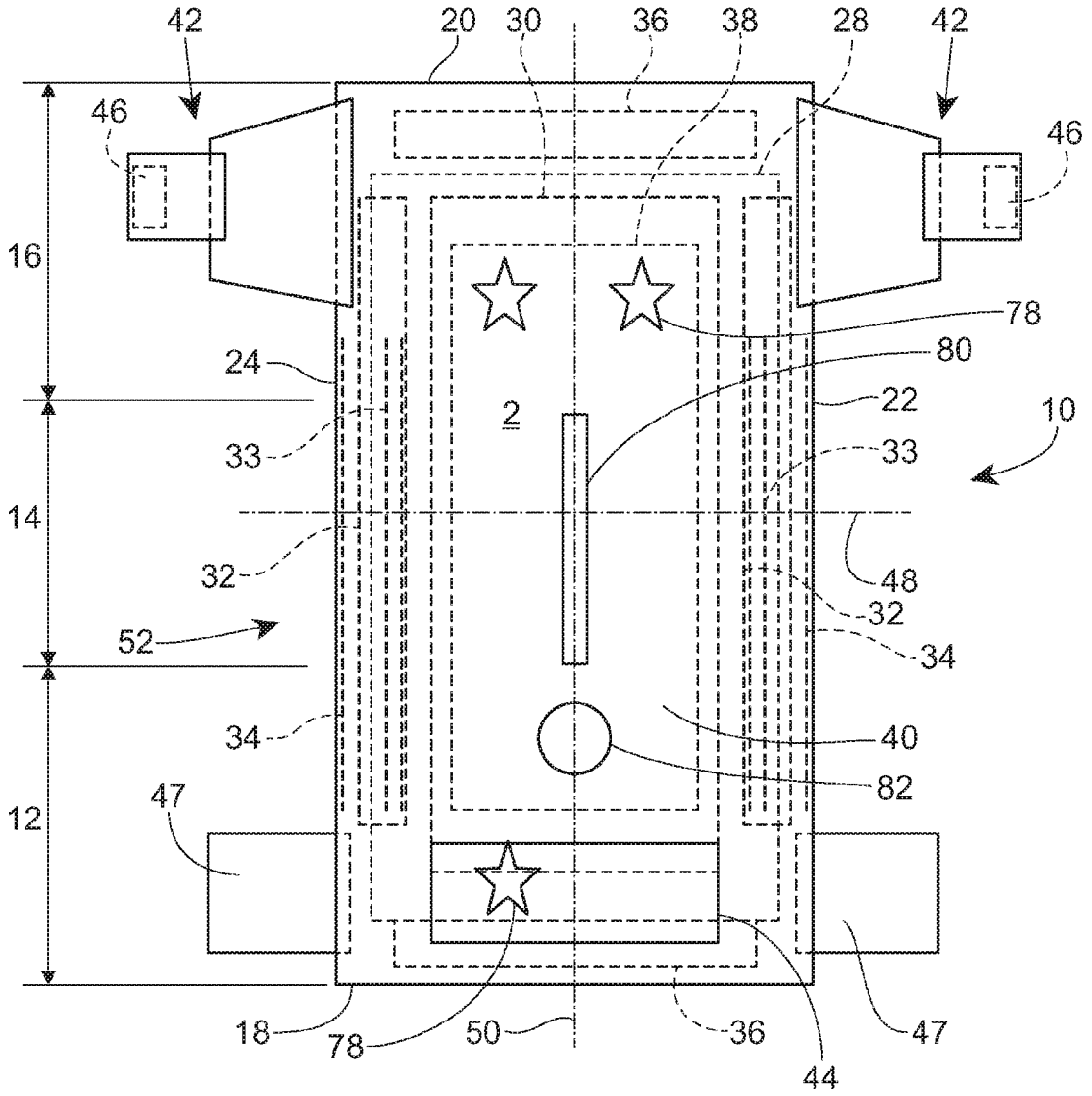
Absorbent articles designed and configured to leverage a greater amount of plant-derived materials and/or to minimize the inclusion of unwanted materials towards providing a more pure end product to consumers desiring the same are described. The absorbent articles may include plant-based materials in both a wearer-facing layer and the opposing garment-facing layer.