FIG.1

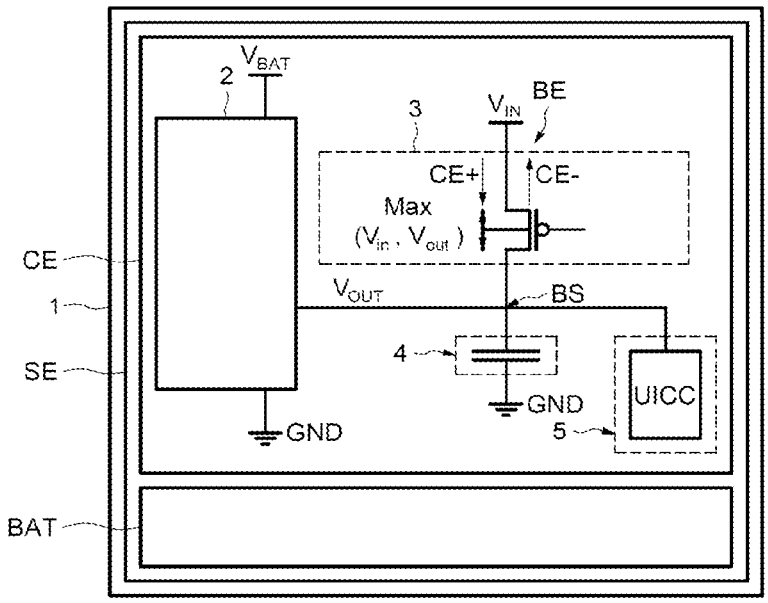
V_{BAT}
2
3
V_{IN}
BE
CE+
CE-
Max
(V_{in}, V_{out})
CE
1
V_{OUT}
BS
4
SE
GND
UICC
GND
5
BAT

FIG.2

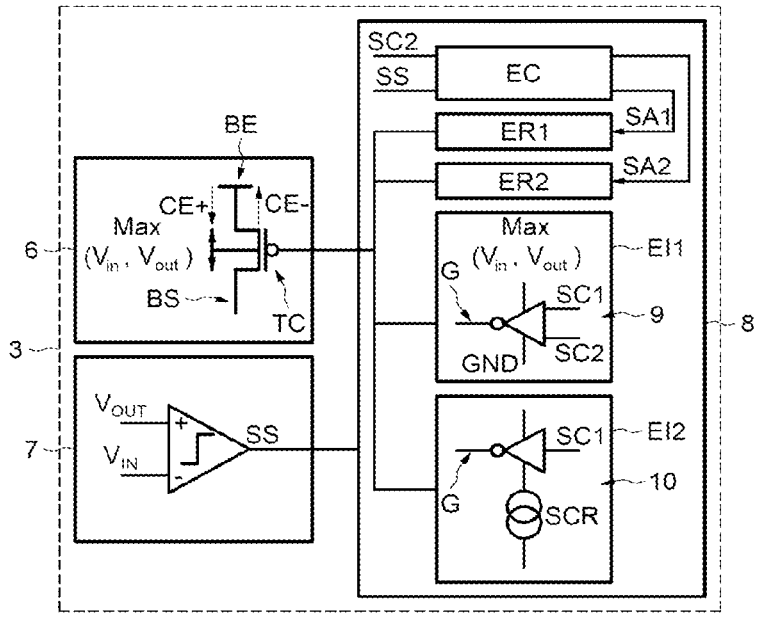
SC2
SS
EC
SA1
ER1
SA2
ER2
BE
CE+
CE-
Max
(V_{in}, V_{out})
6
BS
TC
3
Max
(V_{in}, V_{out})
EI1
G
SC1
9
8
GND
SC2
V_{OUT}
V_{IN}
SS
7
SC1
EI2
G
10
SCR