FIG.3

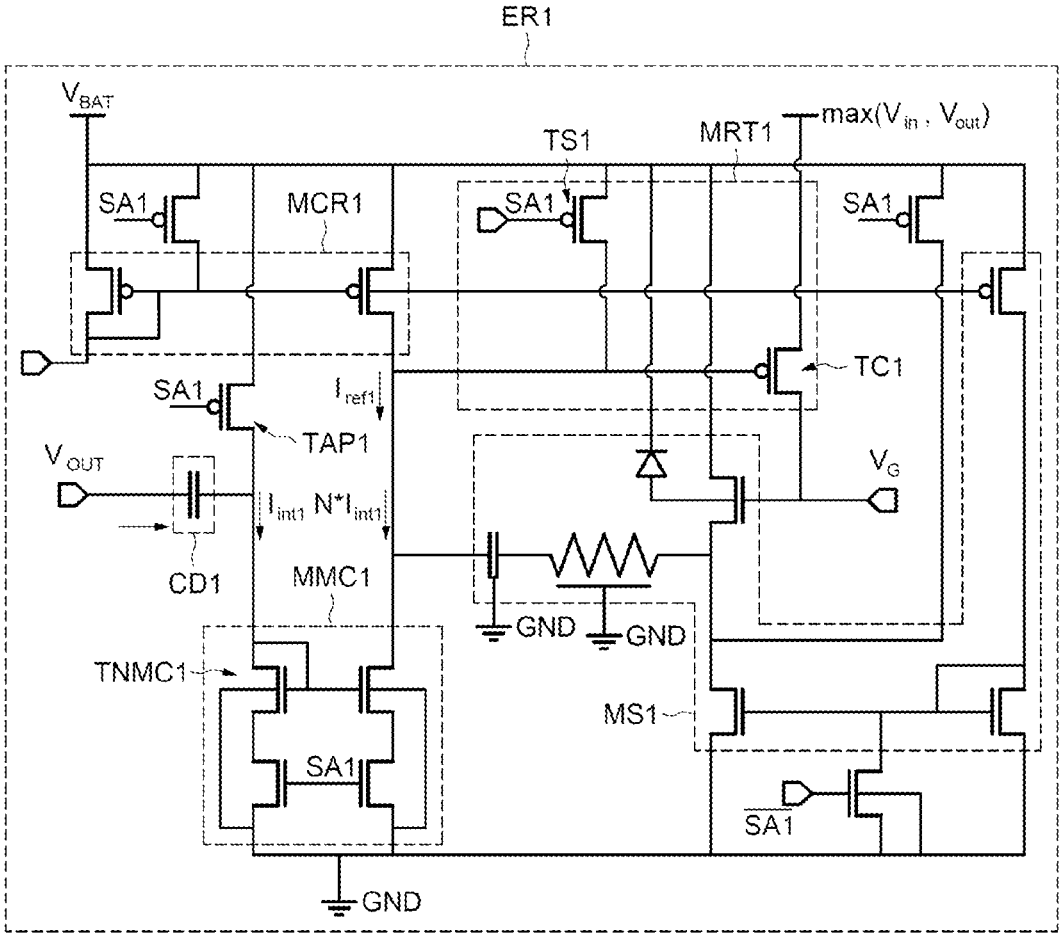
ER1
V_{BAT}
max(V_{in}, V_{out})
TS1
MRT1
SA1
MCR1
SA1
SA1
TC1
SA1
I_{ref1}
TAP1
V_{OUT}
V_G
I_{int1} $N*I_{int1}$
CD1
MMC1
GND
GND
TNMC1
MS1
SA1
SA1
GND