US 20210247552A1

(19) United States

(12) Patent Application Publication

McCoy et al.

(10) Pub. No.: US 2021/0247552 A1

(43) Pub. Date: Aug. 12, 2021

(54) **ACTIVE PRIVACY SCREEN**

(71) Applicant: **Sony Interactive Entertainment Inc.**, Tokyo (JP)

(72) Inventors: **Charles McCoy**, San Mateo, CA (US); **True Xiong**, San Mateo, CA (US)

(21) Appl. No.: **16/784,932**

(22) Filed: **Feb. 7, 2020**

Publication Classification

(51) **Int. Cl.**

G02B 5/00	(2006.01)
G06K 9/00	(2006.01)
G06T 7/70	(2006.01)
G09G 3/00	(2006.01)
G08B 7/06	(2006.01)

(52) **U.S. Cl.**

CPC ***G02B 5/003*** (2013.01); ***G06K 9/00362*** (2013.01); ***G06T 7/70*** (2017.01); ***G09G 3/007*** (2013.01); *G06F 3/013* (2013.01); *G09G 2354/00* (2013.01); *G09G 2358/00* (2013.01); *G06T 2207/30196* (2013.01); *G09G 2320/068* (2013.01); ***G08B 7/06*** (2013.01)

(57) **ABSTRACT**
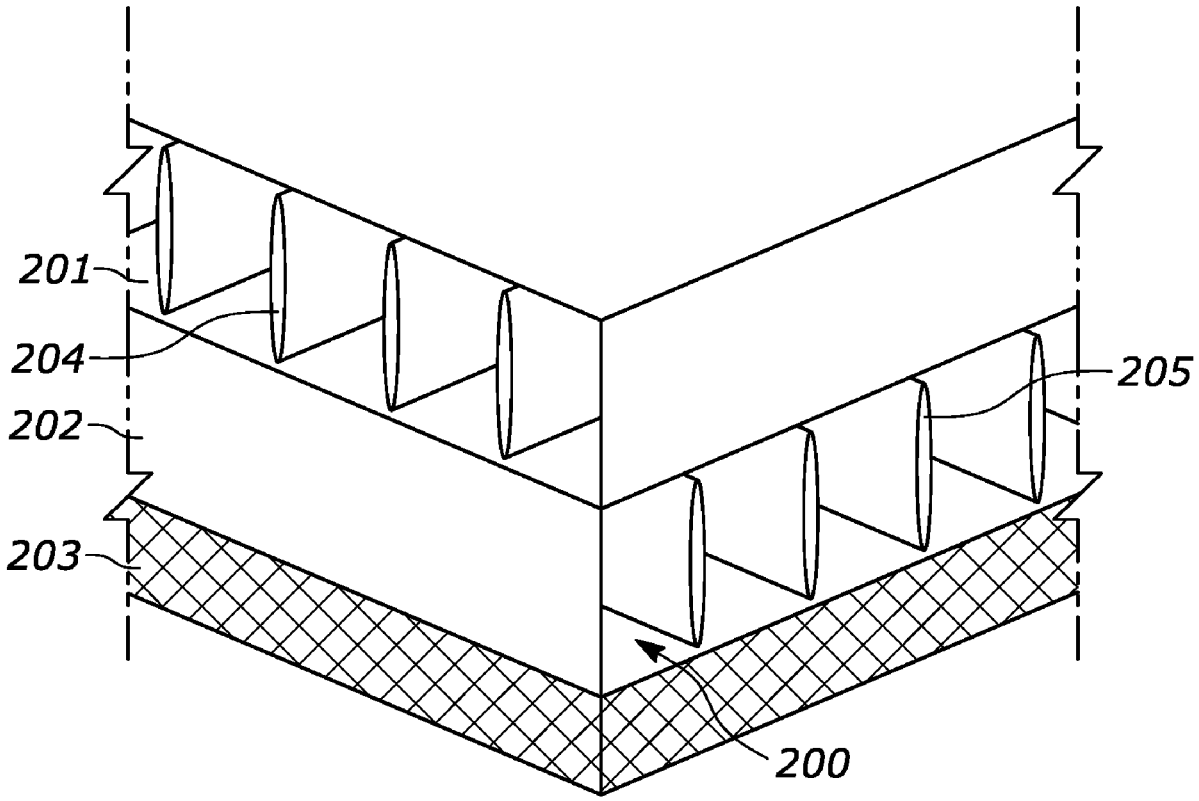
An assembly juxtaposed with a computer display has rows and columns of movable louvers that move as the user's head moves to permit light from the display to reach the user's eyes but to screen light from the display in other directions, to reduce the risk of eavesdropping.