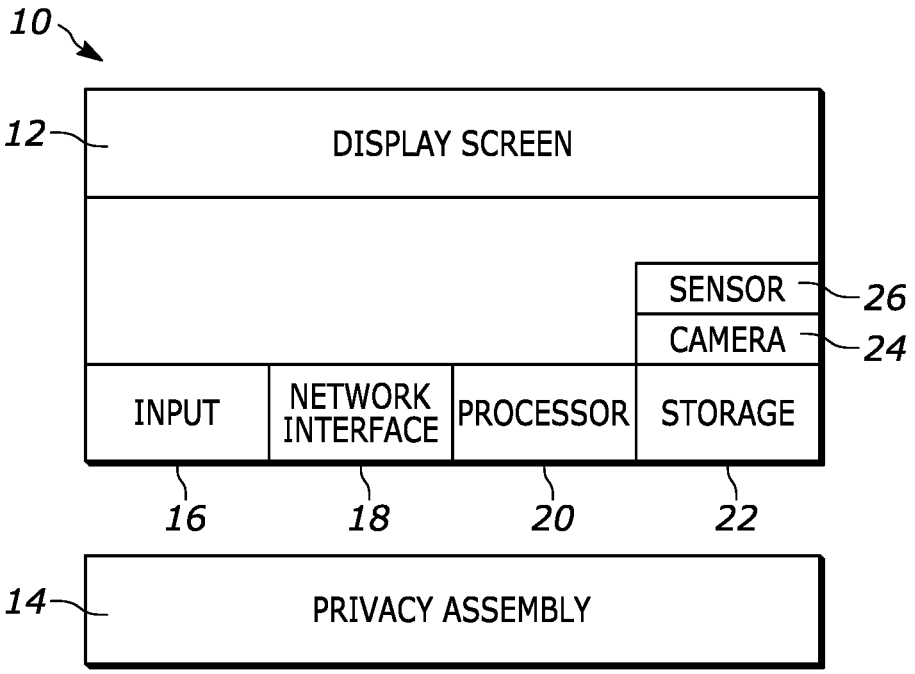
10
12
DISPLAY SCREEN
SENSOR
26
CAMERA
24
INPUT
NETWORK INTERFACE
PROCESSOR
STORAGE
16
18
20
22
14
PRIVACY ASSEMBLY

FIG. 1

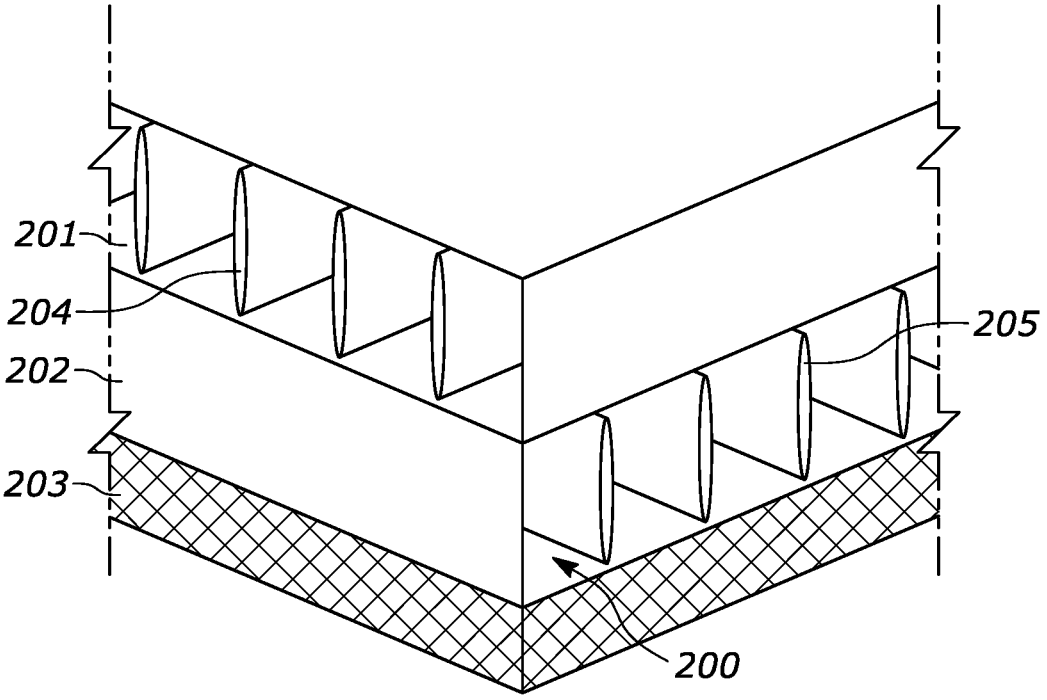
201
204
202
203
205
200

FIG. 2