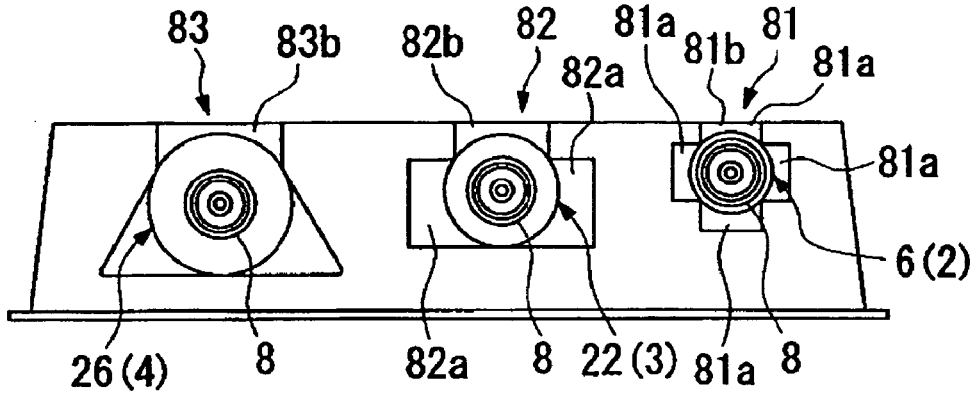
83
83b
82b
82
82a
81a
81b
81
81a
81a
6(2)
26(4)
8
82a
8
22(3)
81a
8

Fig. 12

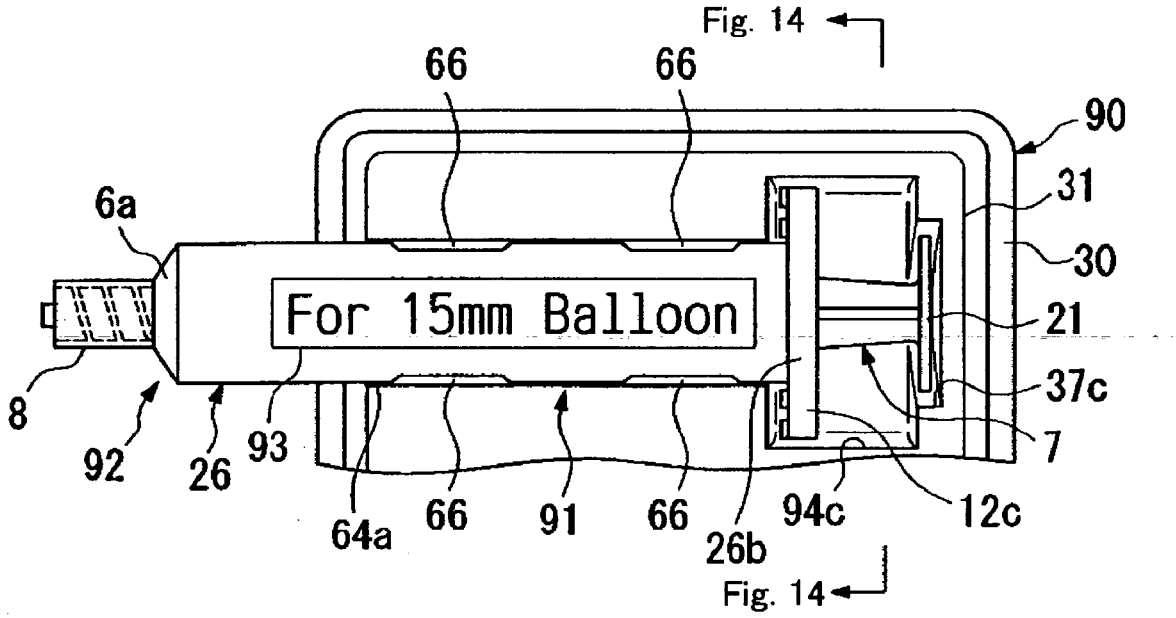
Fig. 14
66
66
90
31
6a
30
For 15mm Balloon
21
37c
8
7
92
26
93
64a
66
91
66
26b
94c
12c
Fig. 14

Fig. 13