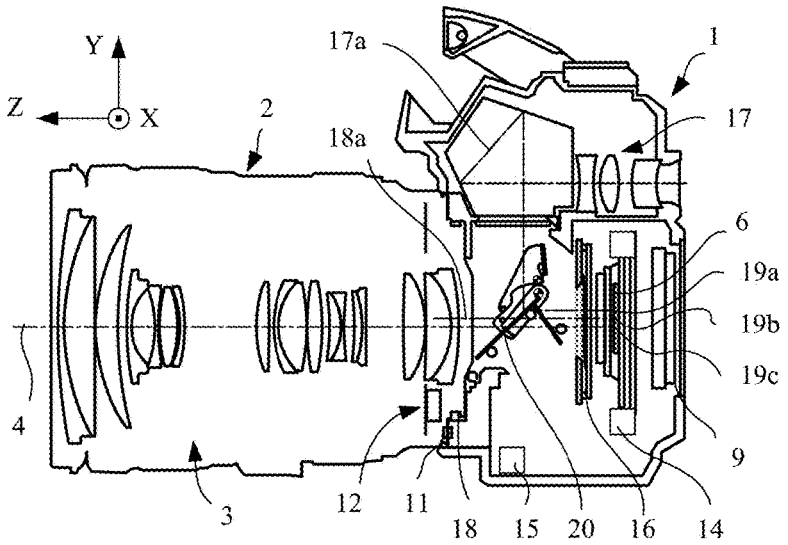
Y
Z
X
17a
1
17
2
18a
6
19a
19b
19c
4
9
3
12
11
18
15
20
16
14

FIG. 1A

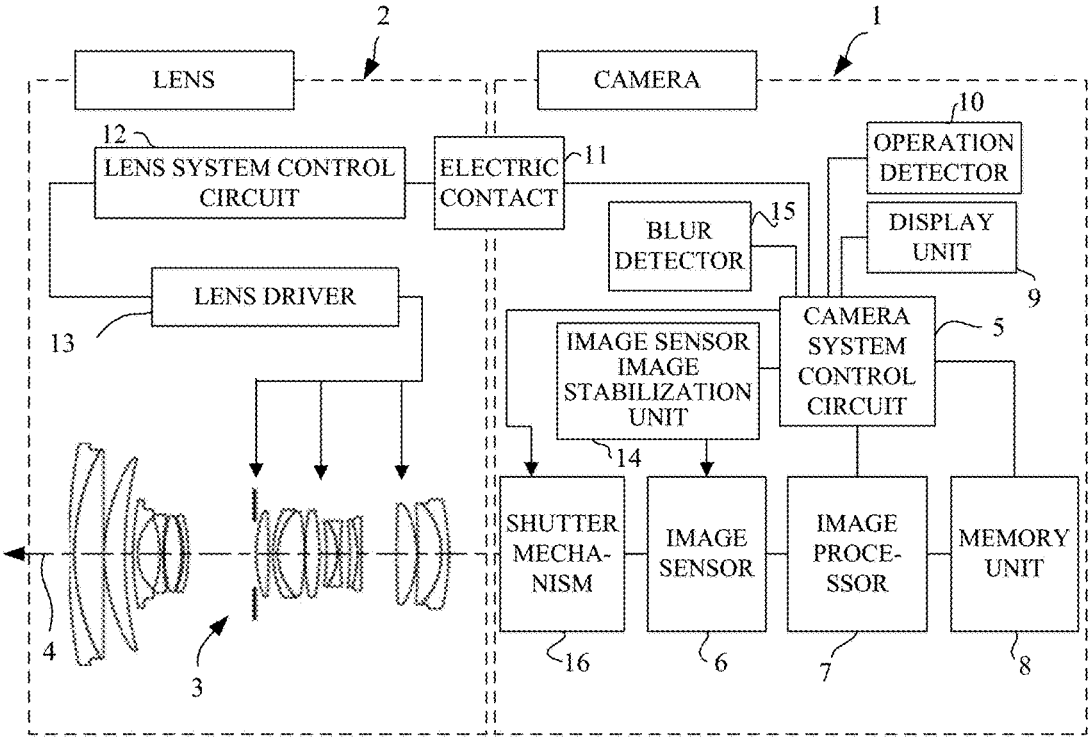
2
1
LENS
CAMERA
10
12
LENS SYSTEM CONTROL CIRCUIT
ELECTRIC CONTACT
11
OPERATION DETECTOR
BLUR DETECTOR
15
DISPLAY UNIT
9
LENS DRIVER
13
CAMERA SYSTEM CONTROL CIRCUIT
5
IMAGE SENSOR IMAGE STABILIZATION UNIT
14
SHUTTER MECHA-NISM
IMAGE SENSOR
IMAGE PROCE-SSOR
MEMORY UNIT
4
3
16
6
7
8

FIG. 1B