US 20190262555A1

(19) United States

(12) Patent Application Publication

Kamen et al.

(10) Pub. No.: US 2019/0262555 A1

(43) Pub. Date: Aug. 29, 2019

(54) **DEVICE TO DETERMINE VOLUME OF FLUID DISPENSED**

(71) Applicant: **DEKA Products Limited Partnership**, Manchester, NH (US)

(72) Inventors: **Dean Kamen**, Bedford, NH (US); **Larry B. Gray**, Merrimack, NH (US); **Russell H. Beavis**, Merrimack, NH (US); **John M. Kerwin**, Manchester, NH (US); **Derek G. Kane**, Manchester, NH (US)

(21) Appl. No.: **16/407,874**

(22) Filed: **May 9, 2019**

Related U.S. Application Data

(63) Continuation of application No. 14/872,676, filed on Oct. 1, 2015, which is a continuation of application

(Continued)

Publication Classification

(51) **Int. Cl.**

A61M 5/50 (2006.01)

F04B 43/02 (2006.01)

(Continued)

(52) **U.S. Cl.**

CPC ***A61M 5/5086*** (2013.01); ***F04B 43/02*** (2013.01); ***A61M 5/16804*** (2013.01); ***A61J 1/20*** (2013.01); ***A61B 5/1427*** (2013.01); ***A61M 5/14216*** (2013.01); ***A61M 5/365*** (2013.01); ***A61M 5/162*** (2013.01); ***A61M 5/1413*** (2013.01); ***G01F 22/00*** (2013.01); ***A61M 5/16813*** (2013.01); ***A61M 5/14212*** (2013.01); ***A61B 5/0024*** (2013.01); ***A61B 5/6833*** (2013.01); ***A61M 5/16831*** (2013.01); ***A61M 5/142*** (2013.01); ***A61M 5/1723*** (2013.01); ***A61M 5/158*** (2013.01); ***A61M 5/14244*** (2013.01); ***A61M 5/1452*** (2013.01); ***A61M 5/168*** (2013.01); ***A61M 5/172*** (2013.01); ***H04B 7/2609*** (2013.01); ***G08C 17/02*** (2013.01); ***A61M 5/16886*** (2013.01); ***A61M 5/16809*** (2013.01); ***A61M 5/14586*** (2013.01); ***A61M 5/14248*** (2013.01); ***A61M 5/14224*** (2013.01); ***G05D 7/0676*** (2013.01); ***G05D 7/0647*** (2013.01); ***G05B 23/02*** (2013.01); *Y10T 29/49828* (2015.01); *A61M 2205/3331* (2013.01); *Y10T 29/494* (2015.01); *Y10T 29/49236* (2015.01); *Y10T 29/49412* (2015.01); *A61M 2005/1583* (2013.01); *A61M 2005/14252* (2013.01); *A61M 2205/8206* (2013.01); *A61M 2005/1402* (2013.01); *A61M 2205/16* (2013.01); *A61M 2205/581* (2013.01); *A61M 2205/582* (2013.01); *A61M 2205/583* (2013.01); *A61M 2005/14506* (2013.01); *A61M 2205/3368* (2013.01); *A61M 2005/1585* (2013.01); *A61M 2005/1586* (2013.01); *A61M 2205/3337* (2013.01); *A61M 2230/201* (2013.01); *A61M 2205/3303* (2013.01); *A61M 2205/3379* (2013.01); *A61M 2205/50* (2013.01); *A61M 2005/14208* (2013.01); *A61M 2205/3592* (2013.01); *A61M 2205/3523* (2013.01); *A61M 2205/3569* (2013.01); *A61M 2005/16863* (2013.01); *A61M 2205/04* (2013.01); *A61M 2205/502* (2013.01); *A61M 2205/52* (2013.01); *A61B 2560/0412* (2013.01); *A61M 2207/00* (2013.01); *A61M 2205/18* (2013.01);

(Continued)

(57) **ABSTRACT**
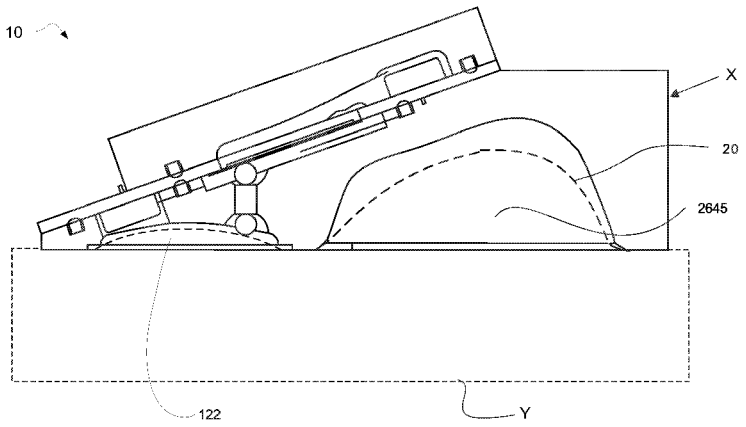
An apparatus for determining the volume of fluid dispensed. The apparatus has an acoustic volume sensor that acoustically excites a reference volume and a measurement chamber with a loudspeaker and measures the acoustic response with microphones acoustically coupled to the reference and the measurement chamber. The loudspeaker and sensing microphones are connected to the measurement chamber by separate ports. A detachable dispensing chamber is coupled to the acoustic volume sensor. The volume of the fluid dispensed is determined by a processor based on the acoustic response of the microphones to acoustic excitement by the loudspeaker.