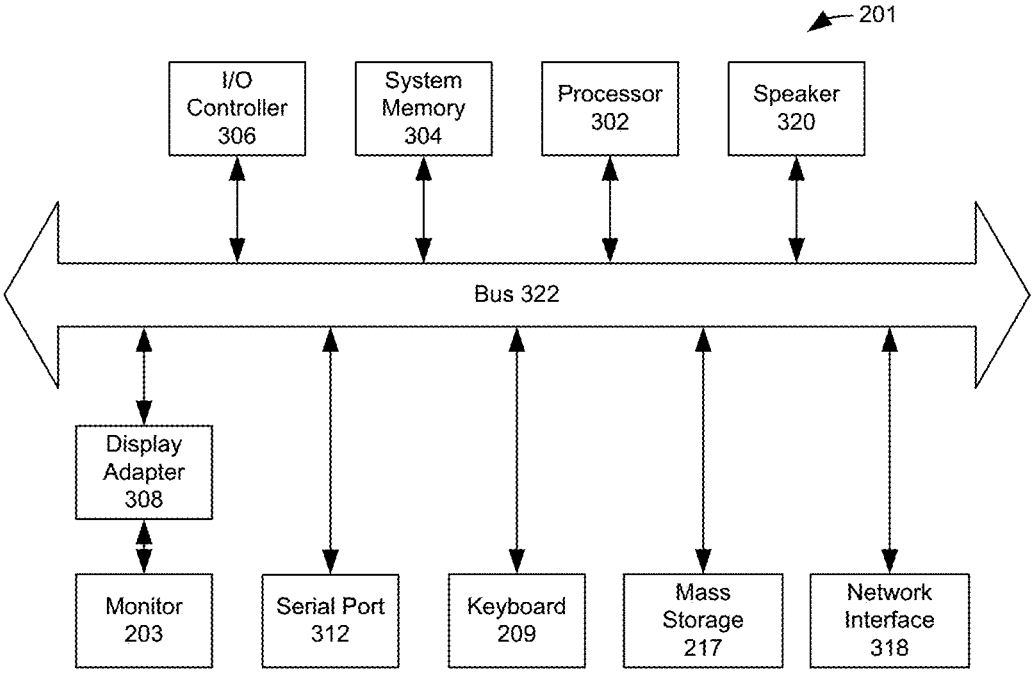
201
I/O Controller 306
System Memory 304
Processor 302
Speaker 320
Bus 322
Display Adapter 308
Monitor 203
Serial Port 312
Keyboard 209
Mass Storage 217
Network Interface 318

Figure 3