US 20210074958A1

(19) United States

(12) Patent Application Publication

Pelletier et al.

(10) Pub. No.: US 2021/0074958 A1

(43) Pub. Date: Mar. 11, 2021

(54) **METAL CAN BATTERY**

(71) Applicant: **Apple Inc.**, Cupertino, CA (US)

(72) Inventors: **David M. Pelletier**, Cupertino, CA (US); **Brad G. Boozer**, Saratoga, CA (US); **Christopher M. Werner**, San Jose, CA (US); **Tianren Xu**, Cupertino, CA (US); **Brian K. Shiu**, Sunnyvale, CA (US); **Simone M. Missirian**, San Jose, CA (US); **Haran Balaram**, Sunnyvale (YS); **Abhishek P. Shiwalkar**, Mountain View, CA (US); **Shravan Bharadwaj**, San Jose, CA (US); **Alexander Manosov**, Sunnyvale, CA (US); **Matthew S. Theobald**, San Francisco, CA (US); **Huan Huang**, Fremont, CA (US); **Tyler S. Bushnell**, Mountain View, CA (US); **Katharine R. Chemelewski**, Campbell, CA (US); **Premanand Ramadass**, San Mateo, CA (US); **Yanning Song**, Cupertino, CA (US); **Christopher R. Pasma**, Redwood City, CA (US)

(73) Assignee: **Apple Inc.**, Cupertino, CA (US)

(21) Appl. No.: **16/883,959**

(22) Filed: **May 26, 2020**

Related U.S. Application Data

(60) Provisional application No. 62/897,803, filed on Sep. 9, 2019.

Publication Classification

(51) **Int. Cl.**

H01M 2/02	(2006.01)
H01M 10/48	(2006.01)
H01M 10/42	(2006.01)

(52) **U.S. Cl.**

CPC ***H01M 2/022*** (2013.01); ***H01M 10/48*** (2013.01); *H01M 2220/30* (2013.01); ***H01M 2/0285*** (2013.01); ***H01M 10/425*** (2013.01)

(57) **ABSTRACT**
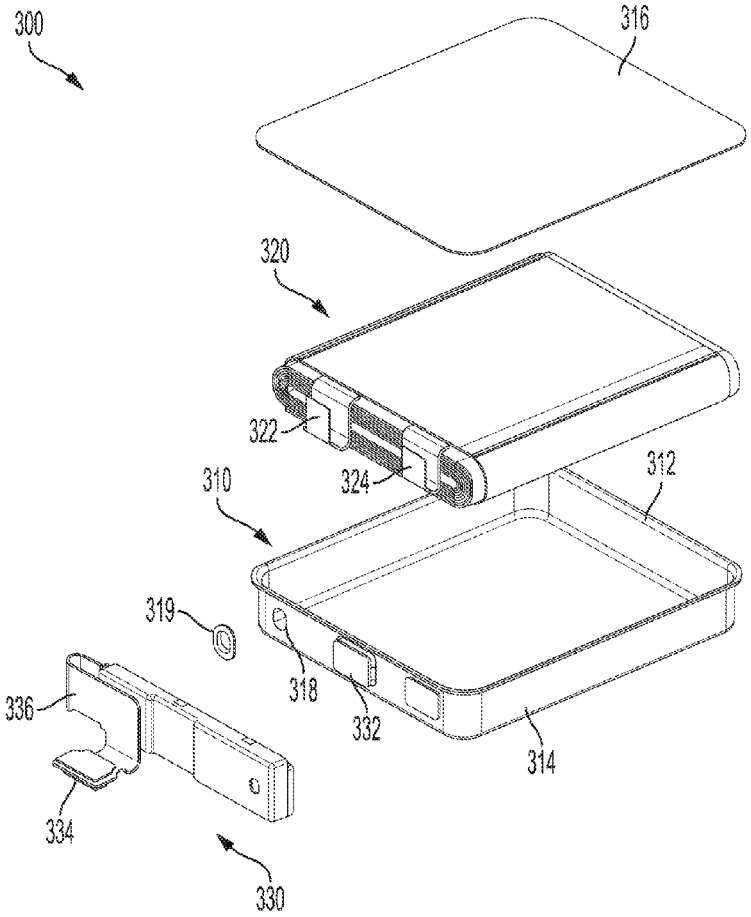
This application relates to a battery system for reducing spacing between components in an electronic device. The battery system includes a housing surrounding an electrode assembly and a connection module. The housing is rigid or semi-rigid and connected to a common ground. The battery system can be positioned in the electronic device to contact components without damaging the components. In some embodiments, the battery system can be used as a structural element in the electronic component.