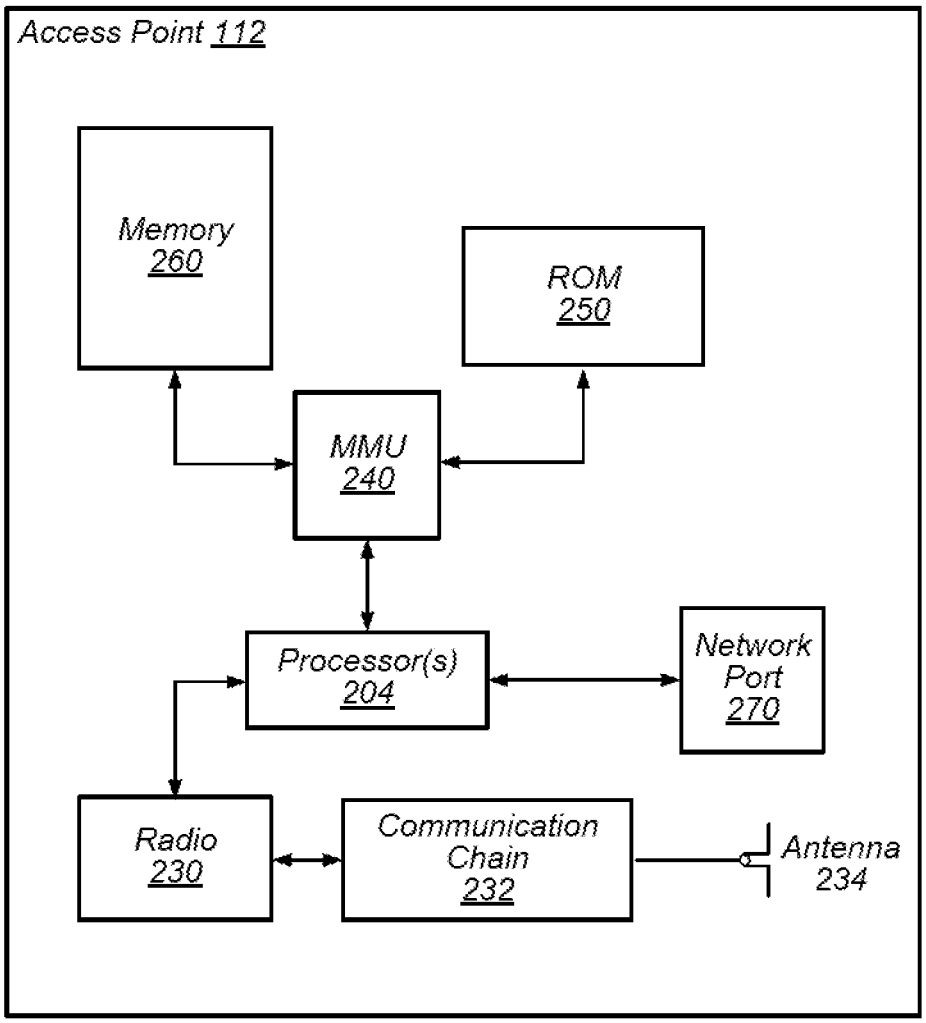
Access Point 112
Memory 260
ROM 250
MMU 240
Processor(s) 204
Network Port 270
Radio 230
Communication Chain 232
Antenna 234

FIG. 2