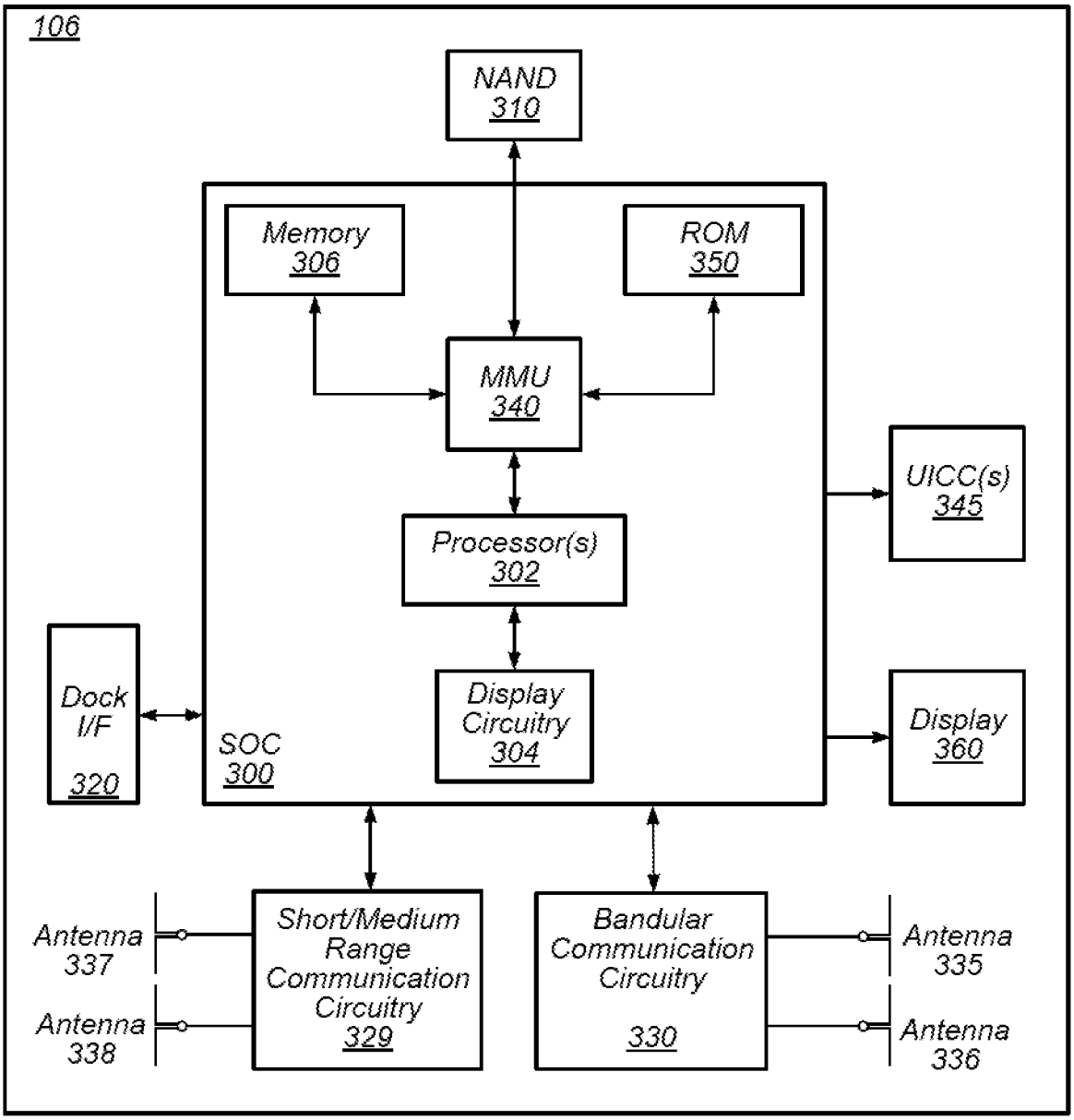
106
NAND
310
Memory
306
ROM
350
MMU
340
UICC(s)
345
Processor(s)
302
Dock
I/F
320
Display
Circuitry
304
SOC
300
Display
360
Antenna
337
Antenna
338
Short/Medium
Range
Communication
Circuitry
329
Bandular
Communication
Circuitry
330
Antenna
335
Antenna
336

FIG. 3