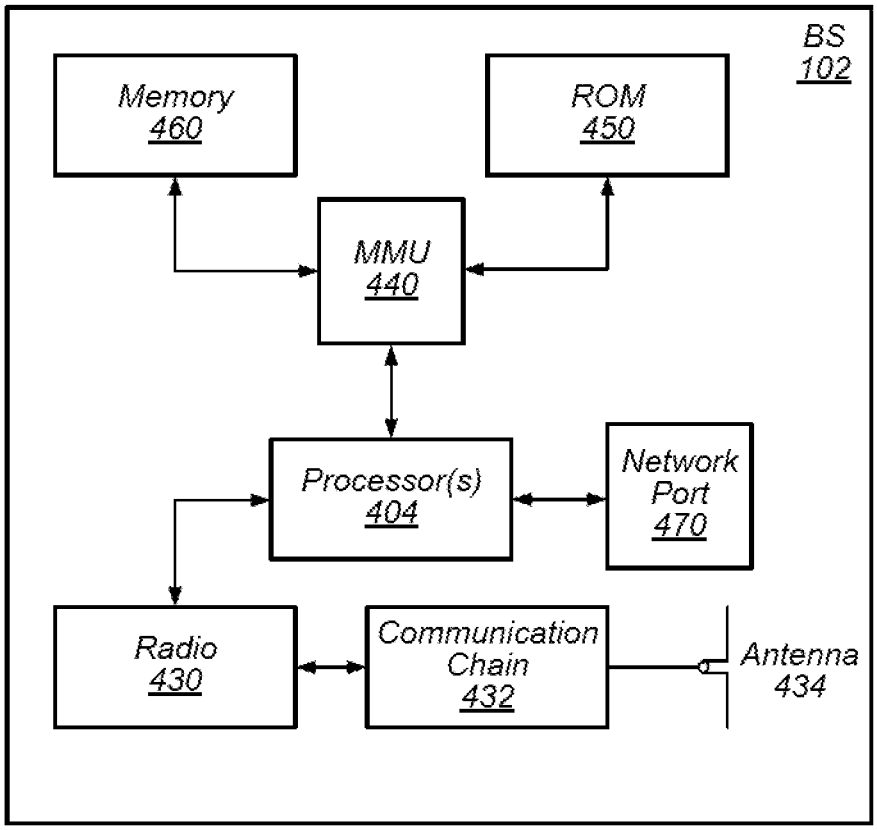
BS
102
Memory
460
ROM
450
MMU
440
Processor(s)
404
Network
Port
470
Radio
430
Communication
Chain
432
Antenna
434

FIG. 4