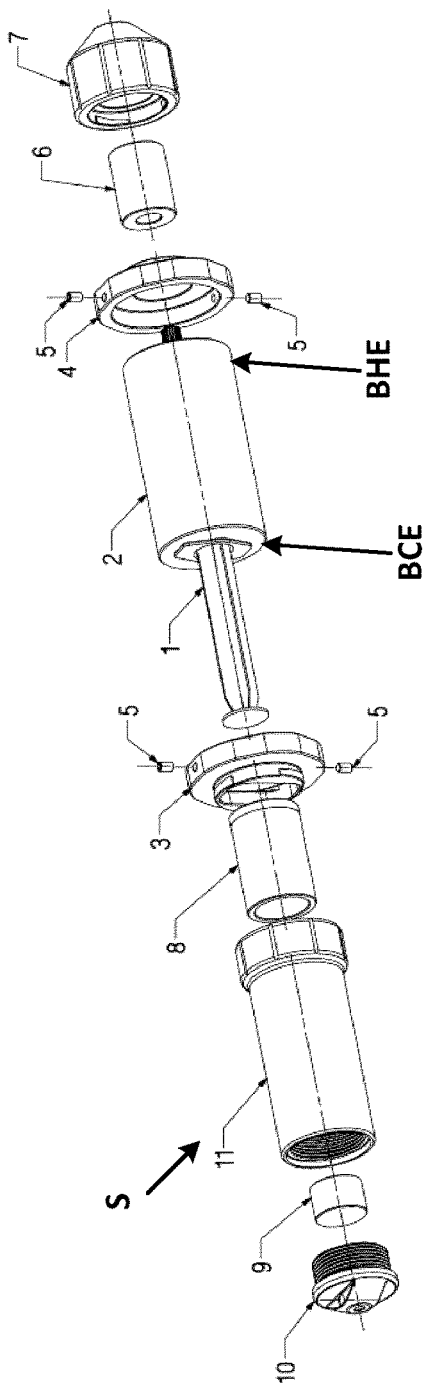

Figure 1

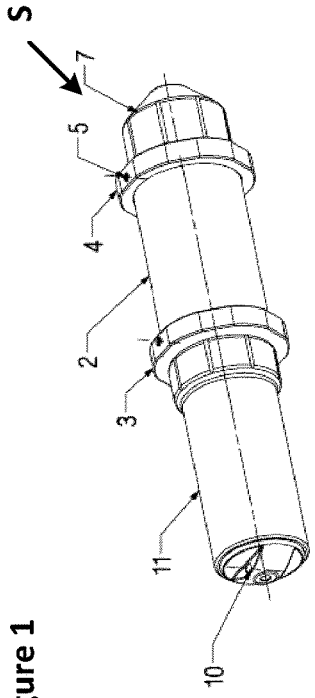

Figure 3

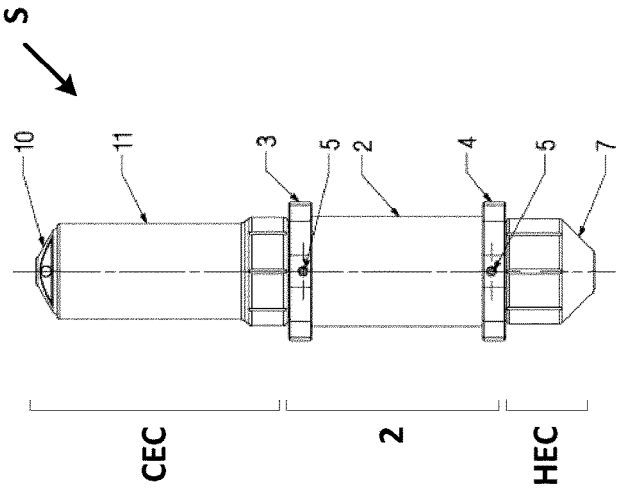

Figure 2