US 20060254861A1

(19) United States

(12) Patent Application Publication

(10) Pub. No.: US 2006/0254861 A1

(43) Pub. Date: Nov. 16, 2006

Perrier et al.

(54) ELECTRONIC SHOPPING CART HANDLE

(75) Inventors: **R. Sylvain Perrier**, Newmarket (CA); **Russell Harper**, Toronto (CA); **Robin Harrison**, East Mount Albert (CA); **Jeremy List**, Newmarket (CA); **Mark Edey**, Ottawa (CA)

Correspondence Address:
BIRCH STEWART KOLASCH & BIRCH
PO BOX 747
FALLS CHURCH, VA 22040-0747 (US)

(73) Assignee: **SPRN Licensing SRL**, St. Michael (BB)

(21) Appl. No.: **11/412,086**

(22) Filed: **Apr. 27, 2006**

Related U.S. Application Data

(60) Provisional application No. 60/675,849, filed on Apr. 29, 2005.

Publication Classification

(51) **Int. Cl.**
B61D 15/00 (2006.01)

(52) **U.S. Cl.** **186/26**

(57) **ABSTRACT**
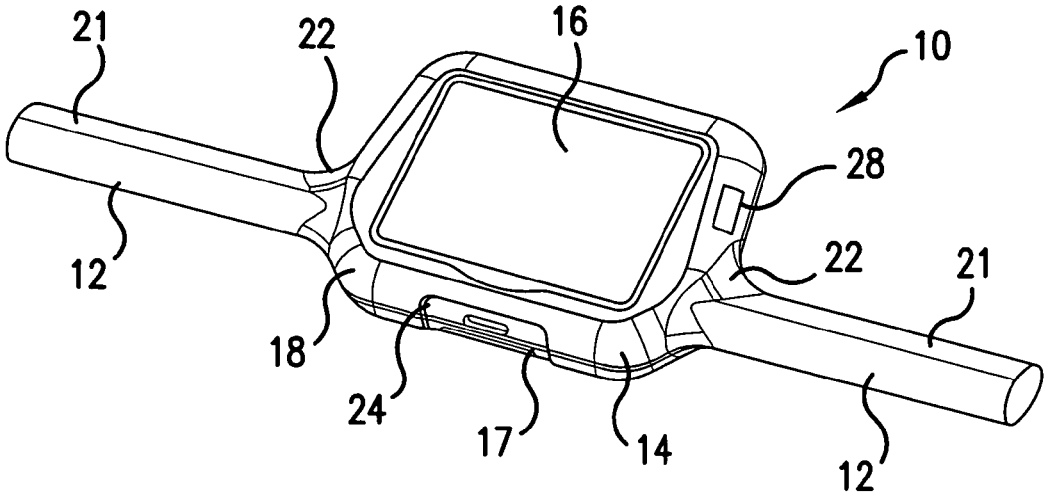
A shopping cart handle includes a housing having a display, electronic circuitry in the housing for generating images on the display, and first and second grip portions each having a flared proximal end connected to the housing and a distal end. The display optionally includes a electronic interface that may be covered by a selectively releasable cover to protect the interface.