US 20200338262A1

(19) United States

(12) Patent Application Publication

(10) Pub. No.: US 2020/0338262 A1

(43) Pub. Date: Oct. 29, 2020

Kamen et al.

(54) **PUMPING FLUID DELIVERY SYSTEMS AND METHODS USING FORCE APPLICATION ASSMEBLY**

(71) Applicant: **DEKA Products Limited Partnership**, MANCHESTER, NH (US)

(72) Inventors: **Dean Kamen**, Bedford, NH (US); **Larry B. Gray**, Merrimack, NH (US); **Eric Yeaton**, Epsom, NH (US)

(21) Appl. No.: **16/927,174**

(22) Filed: **Jul. 13, 2020**

Related U.S. Application Data

(63) Continuation of application No. 13/089,927, filed on Apr. 19, 2011, now Pat. No. 10,709,838, which is a continuation of application No. 11/704,896, filed on Feb. 9, 2007, now Pat. No. 8,585,377.

(60) Provisional application No. 60/772,313, filed on Feb. 9, 2006, provisional application No. 60/789,243, filed on Apr. 5, 2006, provisional application No. 60/793,188, filed on Apr. 19, 2006.

Publication Classification

(51) **Int. Cl.**

A61M 5/168 (2006.01)
F04B 43/02 (2006.01)

(Continued)

(52) **U.S. Cl.**

CPC ***A61M 5/16809*** (2013.01); ***F04B 43/02*** (2013.01); ***A61M 5/14586*** (2013.01); ***G05D 7/0647*** (2013.01); ***G05D 7/0676*** (2013.01); ***F04B 43/09*** (2013.01); ***F04B 43/1253*** (2013.01); ***A61M 5/14224*** (2013.01); ***A61M 5/14248*** (2013.01); ***A61M 5/16886*** (2013.01); ***A61M 5/172*** (2013.01); ***G08C 17/02*** (2013.01); ***H04B 7/2609*** (2013.01); ***A61M 5/168*** (2013.01); ***G05B 23/02*** (2013.01); ***A61M 5/1452*** (2013.01); ***A61M 5/14244*** (2013.01); ***A61M 5/142*** (2013.01); ***A61M 5/158*** (2013.01); ***A61M 5/1723*** (2013.01); ***A61B 5/0024*** (2013.01); ***A61B 5/6833*** (2013.01); ***A61M 5/16831*** (2013.01); ***A61M 5/5086*** (2013.01); ***A61M 5/14212*** (2013.01); ***A61M 5/16813*** (2013.01); ***G01F 22/00*** (2013.01); ***A61M 5/1413*** (2013.01); ***A61M 5/162*** (2013.01); ***A61M 5/14216*** (2013.01); ***A61M 5/365*** (2013.01); ***A61M 5/16804*** (2013.01); ***A61B 5/1427*** (2013.01); ***A61J 1/20*** (2013.01); *Y10T 29/49236* (2015.01); *Y10T 29/494* (2015.01); *Y10T 29/49826* (2015.01); *Y10T 29/49412* (2015.01); *Y10T 29/49828* (2015.01); *A61M 2005/14268* (2013.01); *A61M 2205/0266* (2013.01); *A61M 2205/0294* (2013.01); *A61M 2205/18* (2013.01); *A61M 2205/3331* (2013.01); *A61M 2205/3375* (2013.01); *A61M 2205/3546* (2013.01); *A61M 2205/3576* (2013.01); *A61M 2205/8237* (2013.01); *A61M 2206/22* (2013.01); *A61M 2209/045* (2013.01); *A61M 2207/00* (2013.01); *A61B 2560/0412* (2013.01); *A61M 2005/16863* (2013.01); *A61M 2205/04* (2013.01); *A61M 2205/502* (2013.01); *A61M 2205/52* (2013.01); *A61M 2205/3379* (2013.01); *A61M 2005/14208* (2013.01); *A61M 2205/50* (2013.01); *A61M 2205/3523* (2013.01); *A61M 2205/3569* (2013.01); *A61M 2205/3592* (2013.01); *A61M 2205/3303* (2013.01); *A61M 2230/201* (2013.01); *A61M 2005/1585* (2013.01); *A61M 2005/1586* (2013.01); *A61M 2205/3337* (2013.01); *A61M 2205/3368* (2013.01); *A61M 2005/14252* (2013.01); *A61M 2005/1583* (2013.01); *A61M 2005/14506* (2013.01); *A61M 2005/1402* (2013.01); *A61M 2205/16* (2013.01); *A61M 2205/581* (2013.01); *A61M 2205/582* (2013.01); *A61M 2205/583* (2013.01); *A61M 2205/8206* (2013.01)

(57) **ABSTRACT**
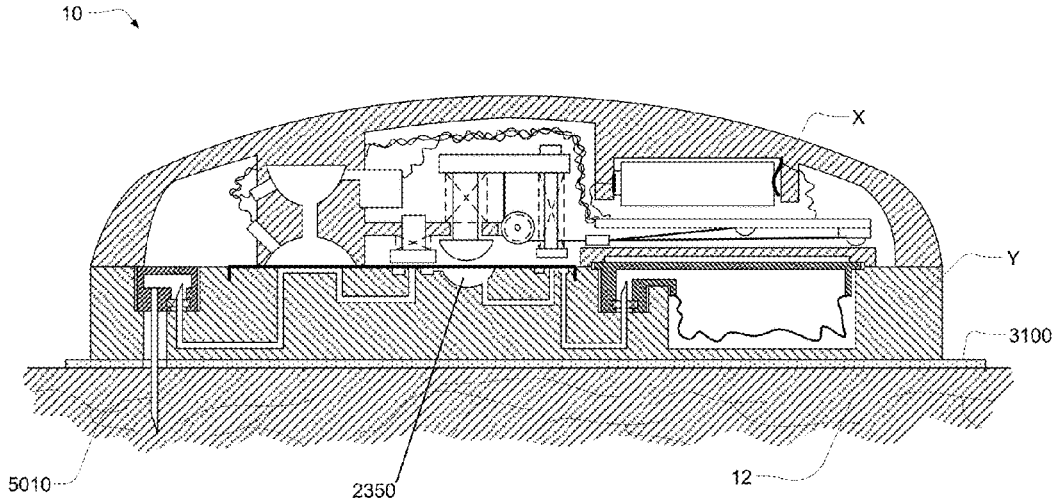
A method of dispensing a therapeutic fluid from a line includes providing an inlet line connectable to an upstream fluid source. The inlet line is in downstream fluid communication with a pumping chamber. The pumping chamber has a pump outlet. The method also includes actuating a force application assembly so as to restrict retrograde flow of fluid through the inlet while pressurizing the pumping chamber to urge flow through the pump outlet. A corresponding system employs the method.