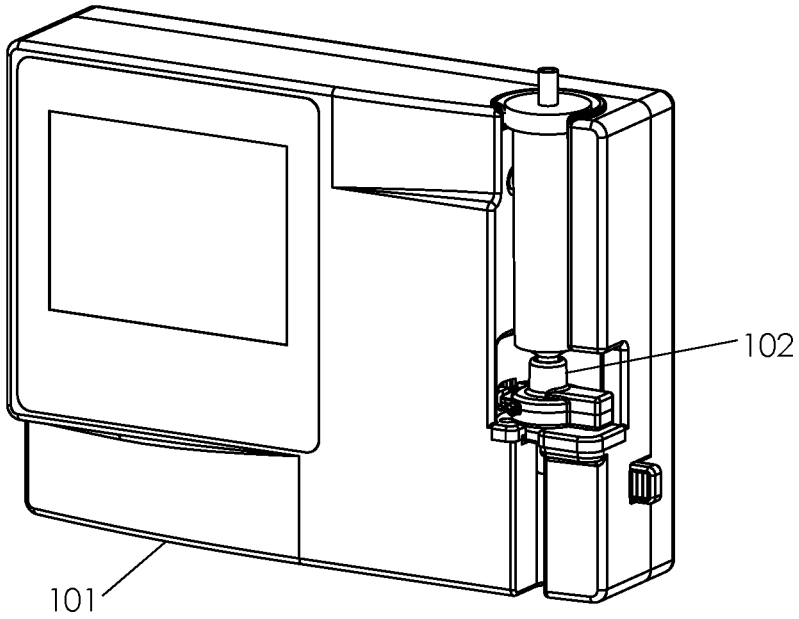

Fig 1

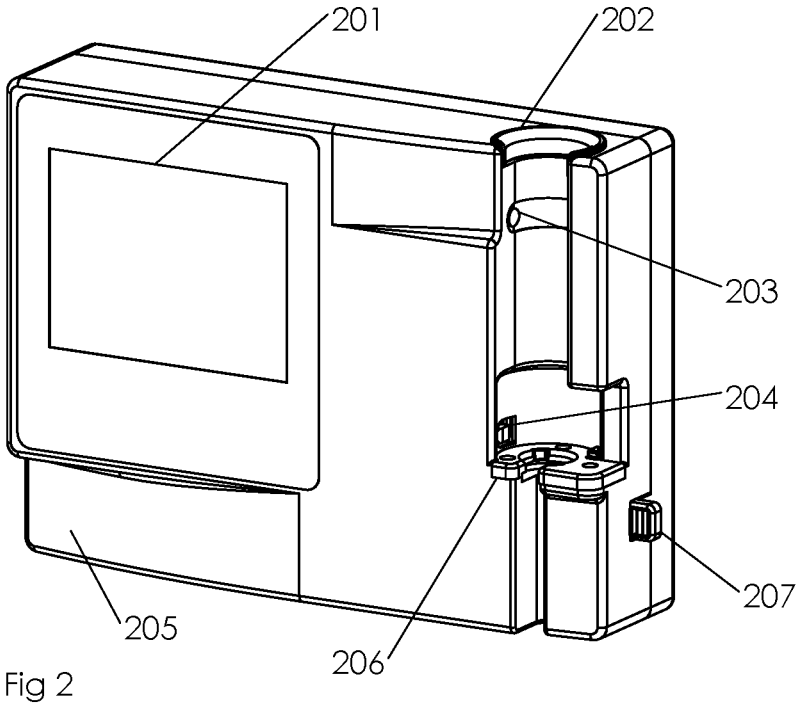

Fig 2