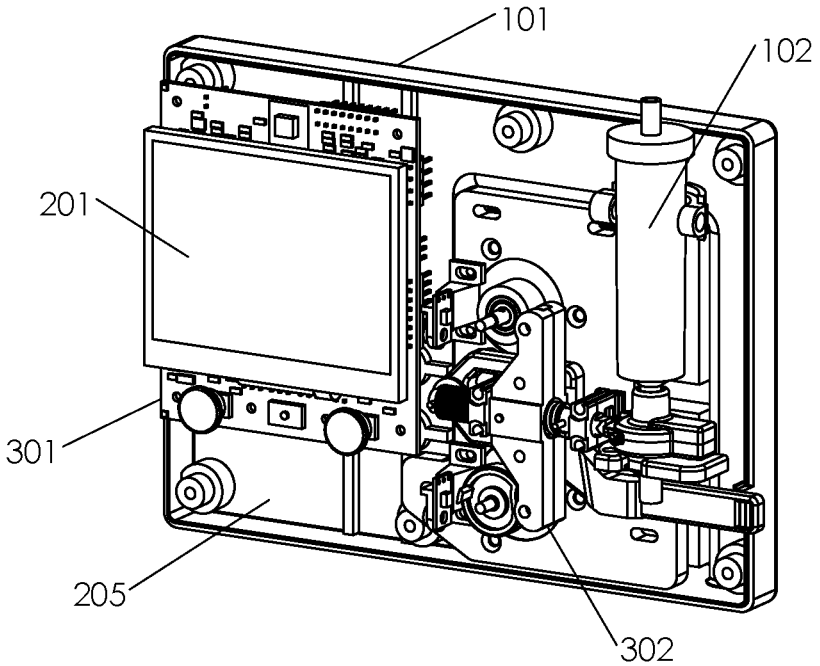

Fig 3