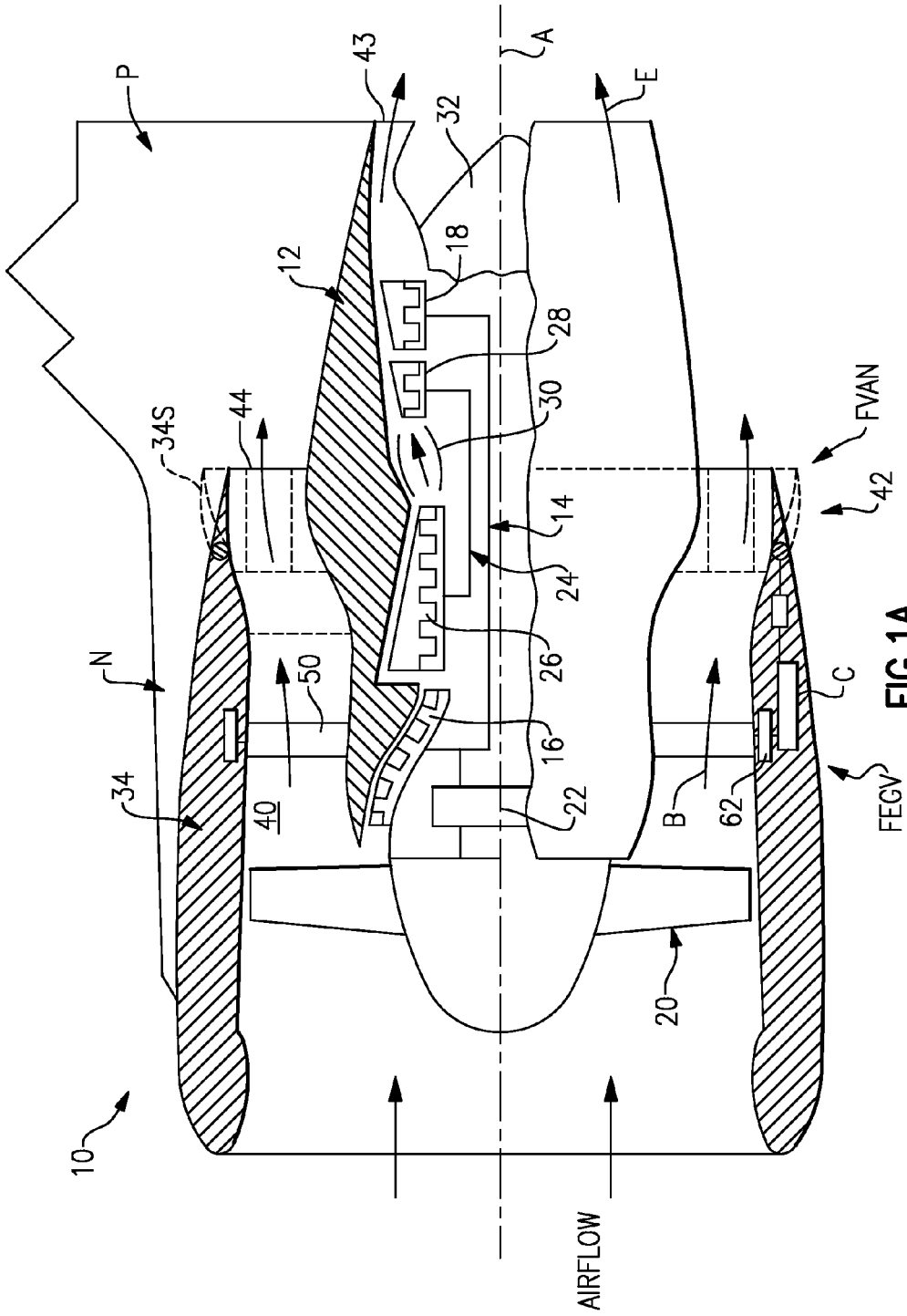
P
43
A
E
32
12
18
28
30
34S
44
FVAN
42
14
24
26
N
50
C
16
34
40
22
B
62
FEGV
20
10
AIRFLOW

FIG.1A