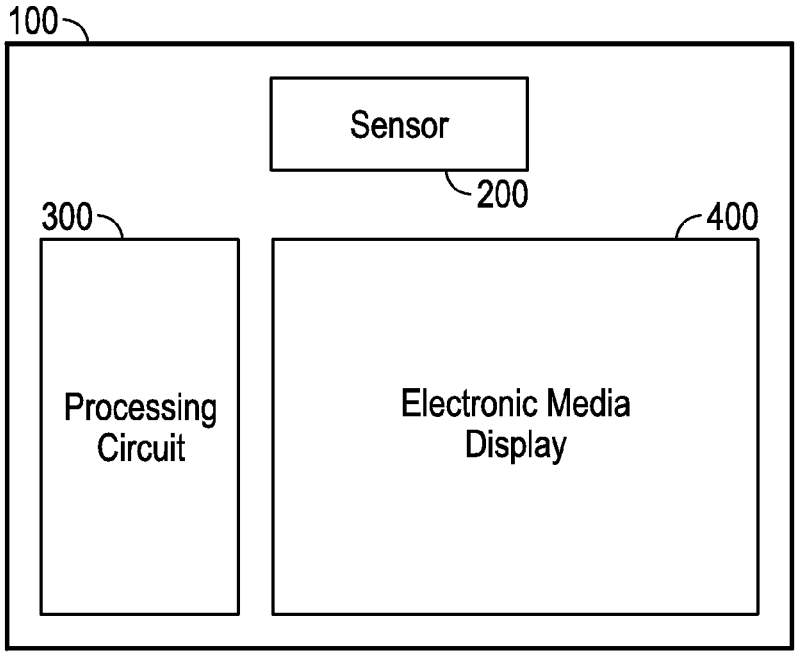
100
Sensor
200
300
400
Processing Circuit
Electronic Media Display

FIG. 2

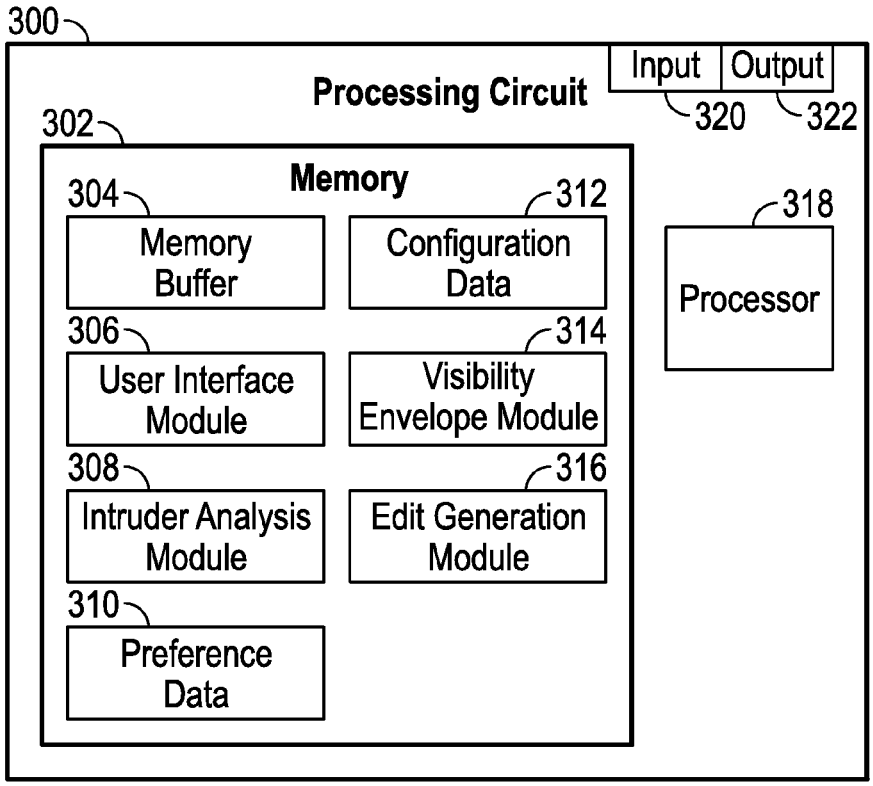
300
Processing Circuit
Input
Output
320
322
302
Memory
304
Memory Buffer
312
Configuration Data
318
Processor
306
User Interface Module
314
Visibility Envelope Module
308
Intruder Analysis Module
316
Edit Generation Module
310
Preference Data

FIG. 3