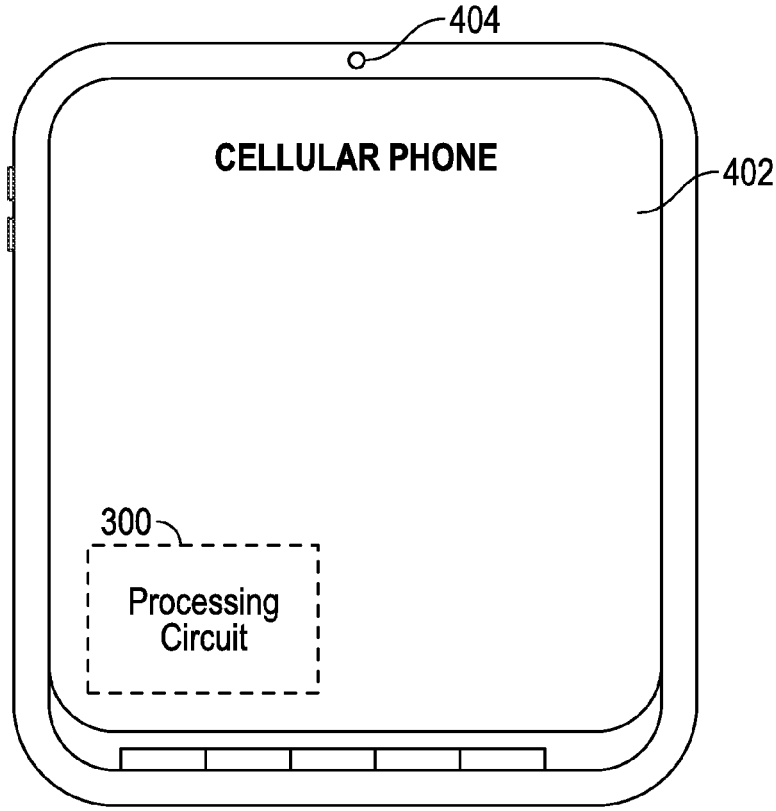
404
CELLULAR PHONE
402
300
Processing
Circuit

FIG. 4

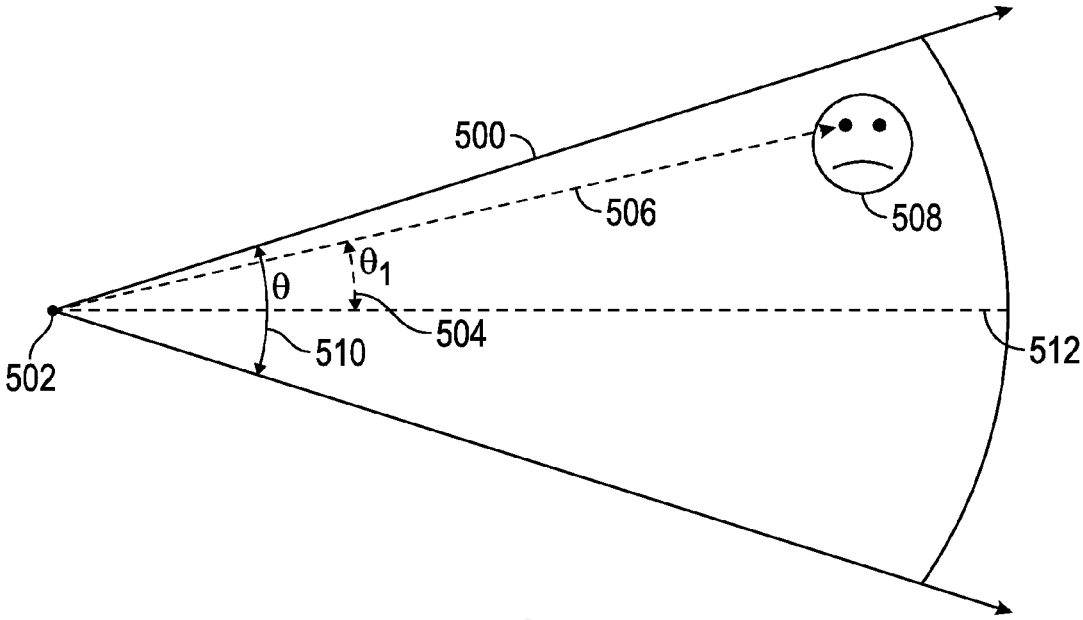
500
506
508
θ
θ1
504
510
502
512

FIG. 5