US 20190296264A1

(19) United States

(12) Patent Application Publication

Mathai et al.

(10) Pub. No.: US 2019/0296264 A1

(43) Pub. Date: Sep. 26, 2019

(54) **QUANTUM DOT BASED PIXEL ASSEMBLY**

(71) Applicant: **Apple Inc.**, Cupertino, CA (US)

(72) Inventors: **Mathew Mathai**, San Jose, CA (US); **Jonathan S. Steckel**, Cupertino, CA (US); **Hitoshi Yamamoto**, Palo Alto, CA (US)

(21) Appl. No.: **16/216,656**

(22) Filed: **Dec. 11, 2018**

Related U.S. Application Data

(60) Provisional application No. 62/647,969, filed on Mar. 26, 2018.

Publication Classification

(51) **Int. Cl.**

H01L 51/52	(2006.01)
H01L 27/32	(2006.01)
H01L 51/50	(2006.01)

(52) **U.S. Cl.**

CPC ***H01L 51/5265*** (2013.01); ***H01L 27/3244*** (2013.01); ***H01L 51/502*** (2013.01); ***H01L 51/5206*** (2013.01); ***H01L 51/5221*** (2013.01); *H01L 2251/558* (2013.01); ***H01L 51/5072*** (2013.01); ***H01L 51/5088*** (2013.01); ***H01L 51/5092*** (2013.01); *H01L 2251/5353* (2013.01); ***H01L 51/5056*** (2013.01)

(57) **ABSTRACT**
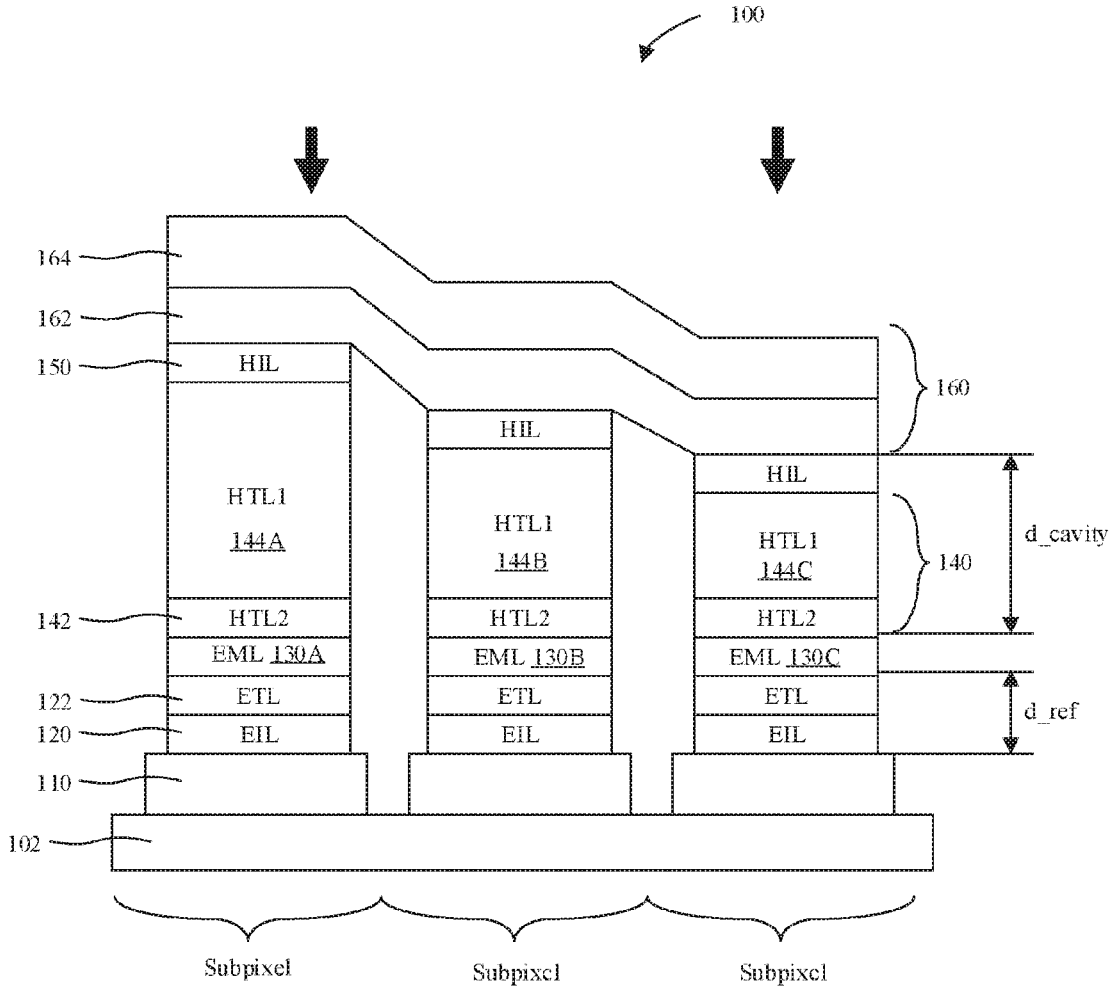
Display panel narrow band emission pixels and methods of fabrication are described. In an embodiment, such a pixel arrangement includes a pair of reflective electrodes, a pair of narrow band emission layers, and a pair of hole transport layers of different thickness over the pair of reflective electrodes and narrow band emission layers. A semi-transparent or transparent top electrode layer is located over the first and second hole transport layers.