US 20190337365A1

(19) United States

(12) Patent Application Publication

Marchetti

(10) Pub. No.: US 2019/0337365 A1

(43) Pub. Date: Nov. 7, 2019

(54) LIGHT WEIGHT REMOVABLE BODY DOOR SYSTEM

(71) Applicant: **Ford Global Technologies, LLC**, Dearborn, MI (US)

(72) Inventor: **Bernard Marchetti**, Rochester Hills, MI (US)

(21) Appl. No.: **15/971,848**

(22) Filed: **May 4, 2018**

Publication Classification

(51) **Int. Cl.**
B60J 5/04 (2006.01)

(52) **U.S. Cl.**
CPC ***B60J 5/0476*** (2013.01); *B60J 5/0463* (2013.01); ***B60J 5/0487*** (2013.01)

(57) **ABSTRACT**
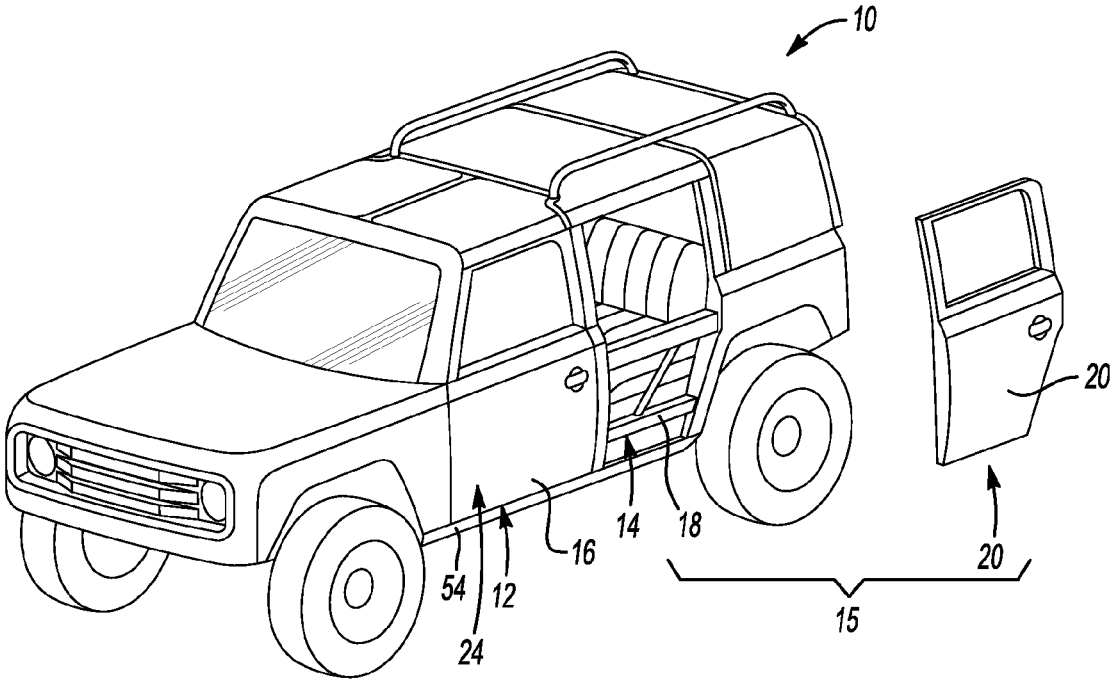
A convertible vehicle door assembly is disclosed and includes a gate subassembly including an electrical panel, latch handle and is secured by hinges and a latch to a vehicle static structure. An outer door subassembly is removably secured to the gate subassembly by at least one quick connect mechanism. The outer door includes a window assembly operable by the electrical control panel.