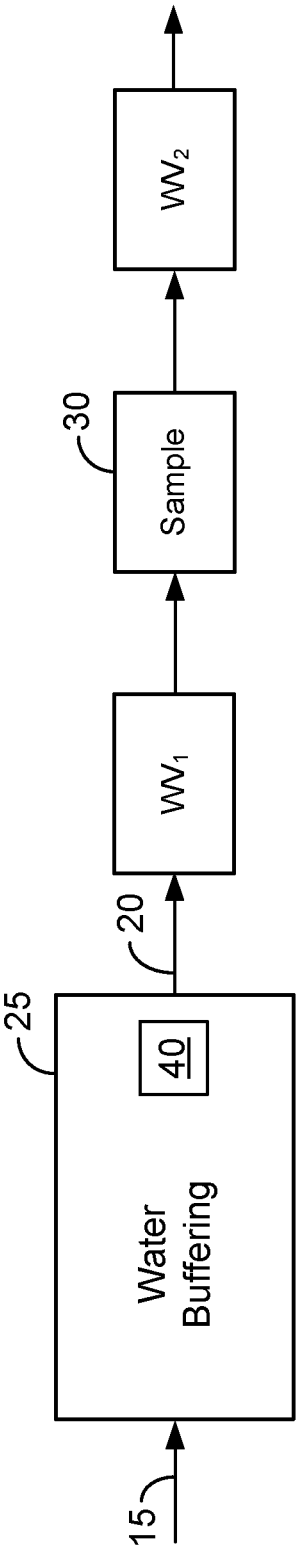
15
25
Water Buffering
40
20
WV1
30
Sample
WV2

FIG. 1A

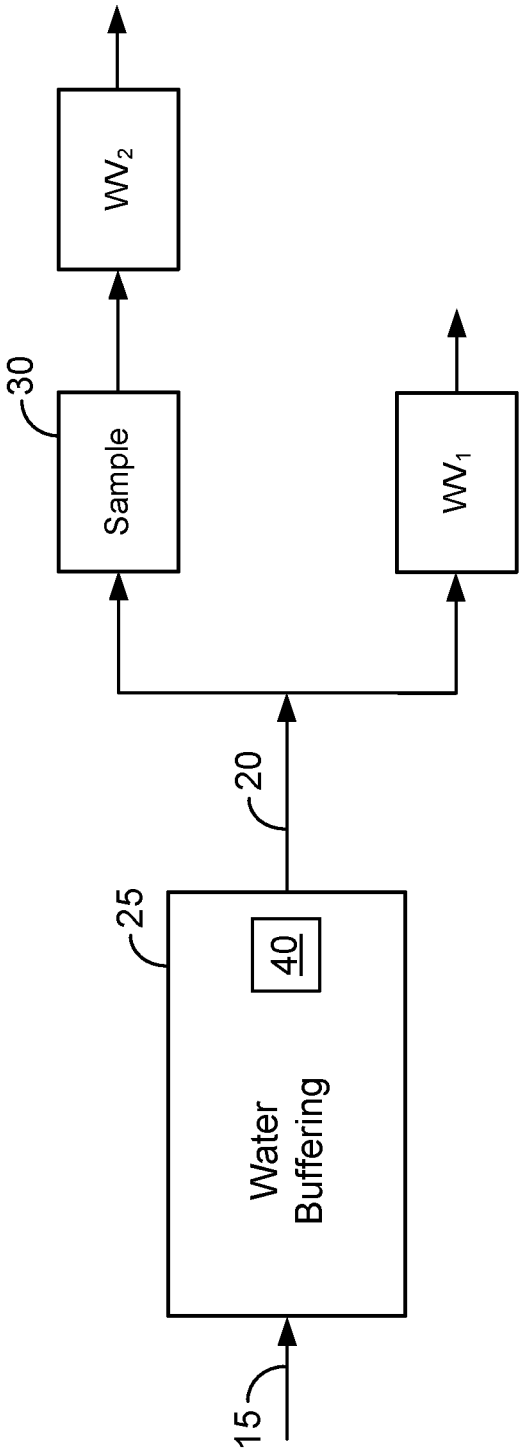
15
25
Water Buffering
40
20
30
Sample
WV2
WV1

FIG. 1B