FIG. 1

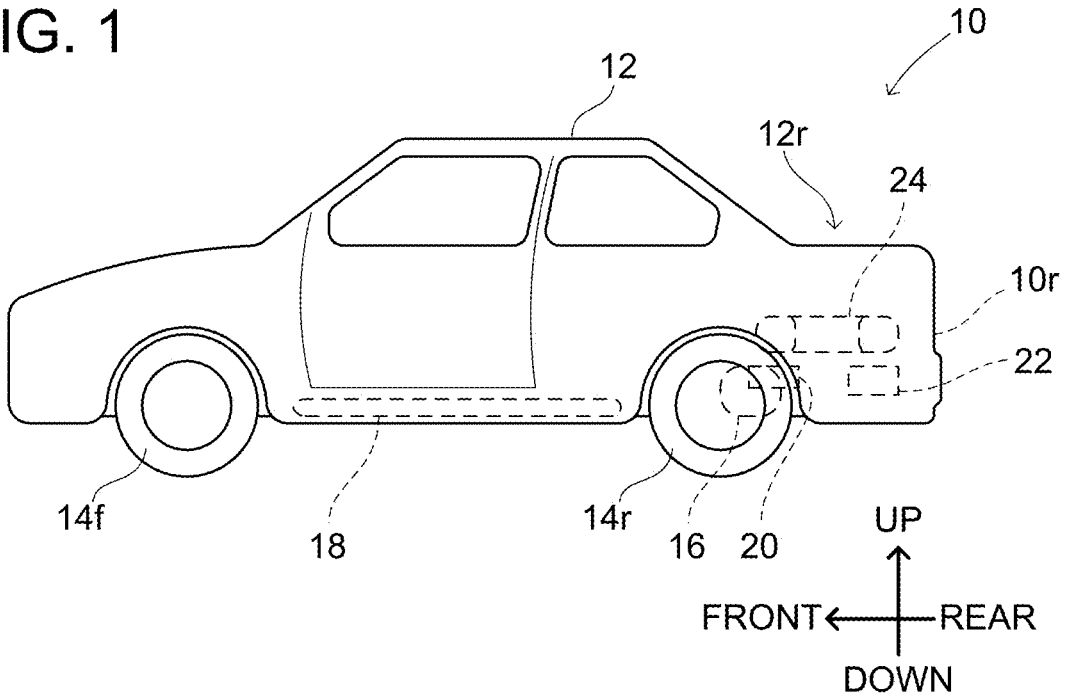
10
12
12r
24
10r
22
14f
18
14r
16
20
UP
FRONT
REAR
DOWN

FIG. 2

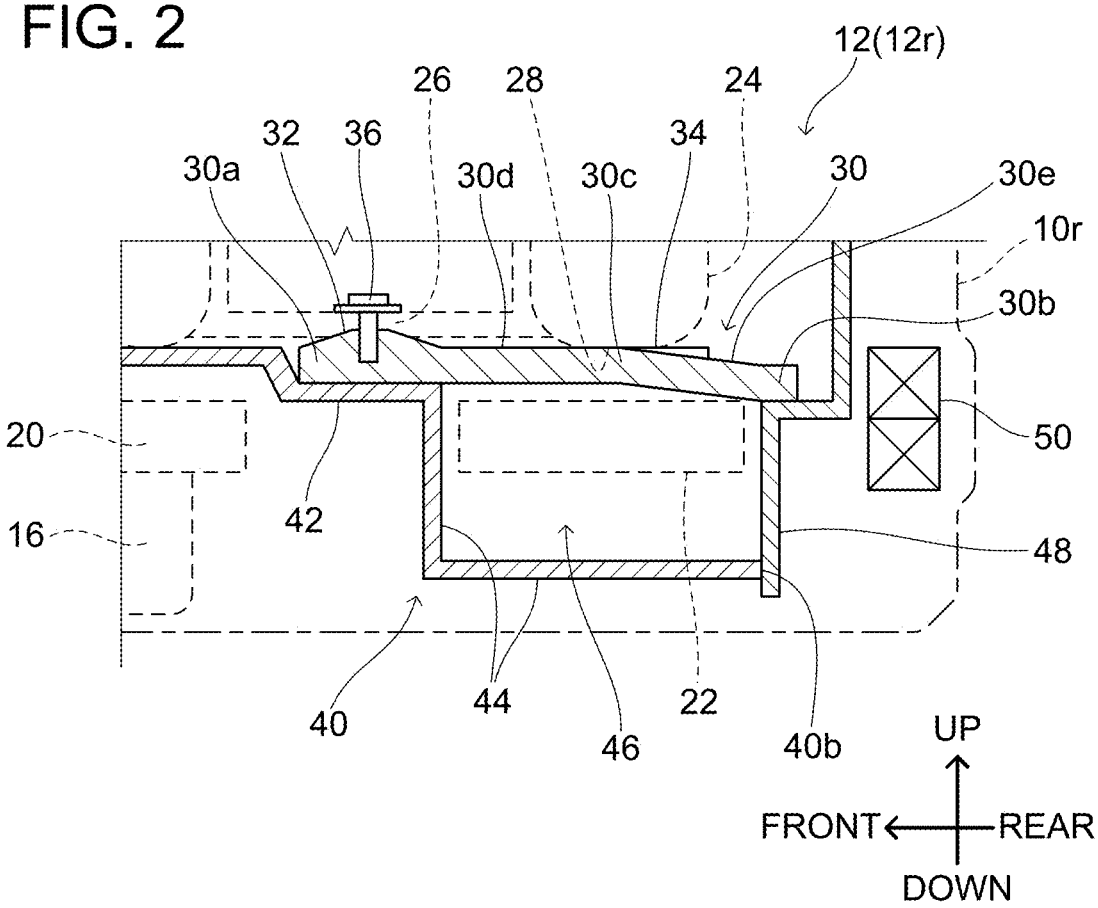
12(12r)
26
28
24
32
36
34
30a
30d
30c
30
30e
10r
30b
20
50
16
42
48
40
44
46
22
40b
UP
FRONT
REAR
DOWN