FIG. 4

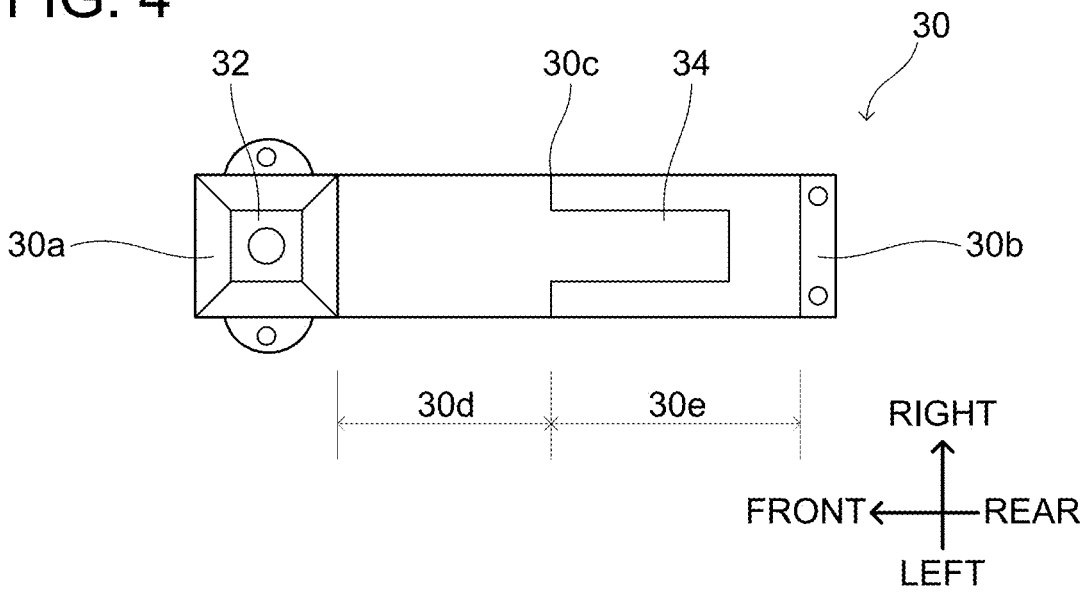
30
32
30c
34
30a
30b
30d
30e
RIGHT
FRONT
REAR
LEFT

FIG. 5

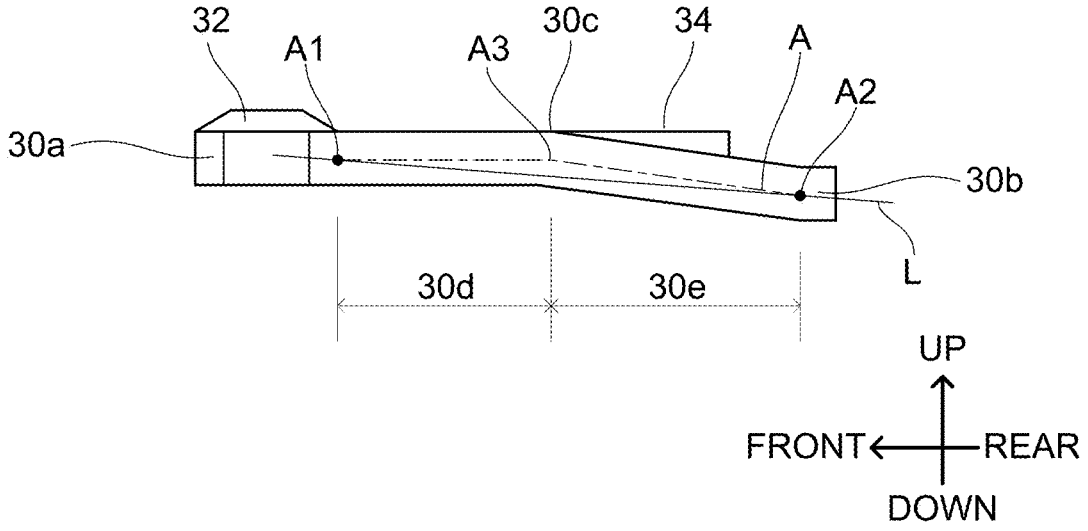
32
A1
A3
30c
34
A
A2
30a
30b
L
30d
30e
UP
FRONT
REAR
DOWN