FIG. 6

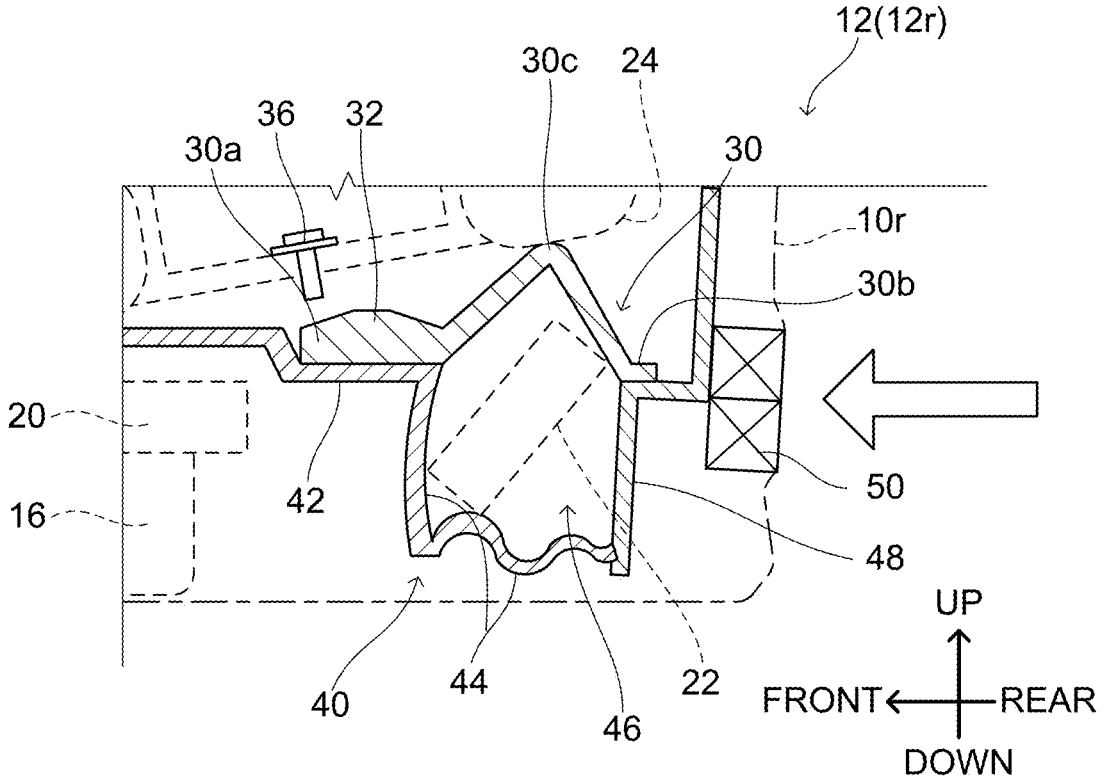
12(12r)
30c
24
36
32
30a
30
10r
30b
20
16
42
50
48
40
44
46
22
UP
FRONT
REAR
DOWN