US 20220041975A1

(19) United States

(12) Patent Application Publication

Langenfeld et al.

(10) Pub. No.: US 2022/0041975 A1

(43) Pub. Date: Feb. 10, 2022

(54) SYSTEM AND METHOD FOR CREATING TISSUE

(71) Applicant: **DEKA Products Limited Partnership**, Manchester, NH (US)

(72) Inventors: **Christopher C. Langenfeld**, Nashua, NH (US); **David D. B. Cannan**, Manchester, NH (US); **Dirk A. van der Merwe**, Canterbury, NH (US); **Dean Kamen**, Bedford, NH (US); **Jason A. Demers**, Manchester, NH (US); **Frederick Morgan**, Bedford, NH (US); **Timothy D. Moreau**, Manchester, NH (US); **Brian D. Tracey**, Litchfield, NH (US); **Matthew Ware**, Merrimack, NH (US); **Richard J. Lanigan**, Concord, NH (US); **Michael A. Baker**, Manchester, NH (US); **David Blumberg, JR.**, Deerfield, NH (US); **Richard E. Gautney**, Manchester, NH (US); **Derek G. Kane**, Manchester, NH (US); **Dane Fawkes**, Amesbury, MA (US); **Thomas J. Bollenbach**, Canton, MA (US); **Michael C. Tilley**, Amherst, NH (US); **Stuart A. Jacobson**, Lexington, MA (US); **John F. Mannisto**, Bedford, NH (US)

(21) Appl. No.: **17/465,133**

(22) Filed: **Sep. 2, 2021**

Related U.S. Application Data

(62) Division of application No. 15/805,790, filed on Nov. 7, 2017.

(60) Provisional application No. 62/534,984, filed on Jul. 20, 2017, provisional application No. 62/418,784, filed on Nov. 7, 2016.

Publication Classification

(51) **Int. Cl.**

C12M 1/36	(2006.01)
C12M 3/00	(2006.01)
C12M 1/34	(2006.01)
C12M 1/00	(2006.01)
C12M 1/12	(2006.01)
C12N 5/00	(2006.01)
C12M 1/26	(2006.01)
A61L 27/38	(2006.01)
B33Y 10/00	(2006.01)
B33Y 30/00	(2006.01)
B33Y 70/00	(2006.01)
A01N 1/02	(2006.01)

(52) **U.S. Cl.**

CPC ***C12M 41/48*** (2013.01); *C12N 2533/00* (2013.01); ***C12M 41/46*** (2013.01); ***C12M 23/22*** (2013.01); ***C12M 27/18*** (2013.01); ***C12M 25/02*** (2013.01); ***C12M 41/12*** (2013.01); ***C12M 41/40*** (2013.01); ***C12N 5/0018*** (2013.01); ***C12M 23/38*** (2013.01); ***C12M 33/00*** (2013.01); ***C12M 29/00*** (2013.01); ***C12M 37/02*** (2013.01); ***A61L 27/3895*** (2013.01); ***B33Y 10/00*** (2014.12); ***B33Y 30/00*** (2014.12); ***B33Y 70/00*** (2014.12); ***A01N 1/0247*** (2013.01); ***C12N 5/0062*** (2013.01); *C12N 2533/50* (2013.01); *C12N 2533/90* (2013.01); ***C12M 21/08*** (2013.01)

(57) **ABSTRACT**
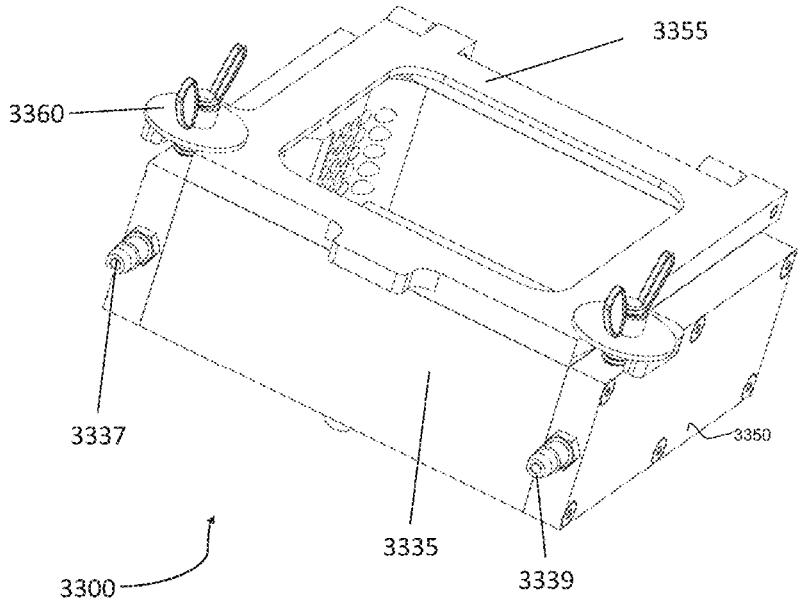
A system and method for growing and maintaining biological material including producing a protein associated with the tissue, selecting cells associated with the tissue, expanding the cells, creating at least one tissue bio-ink including the expanded cells, printing the at least one tissue bio-ink in at least one tissue growth medium mixture, growing the tissue from the printed at least one tissue bio-ink, and maintaining viability of the tissue.