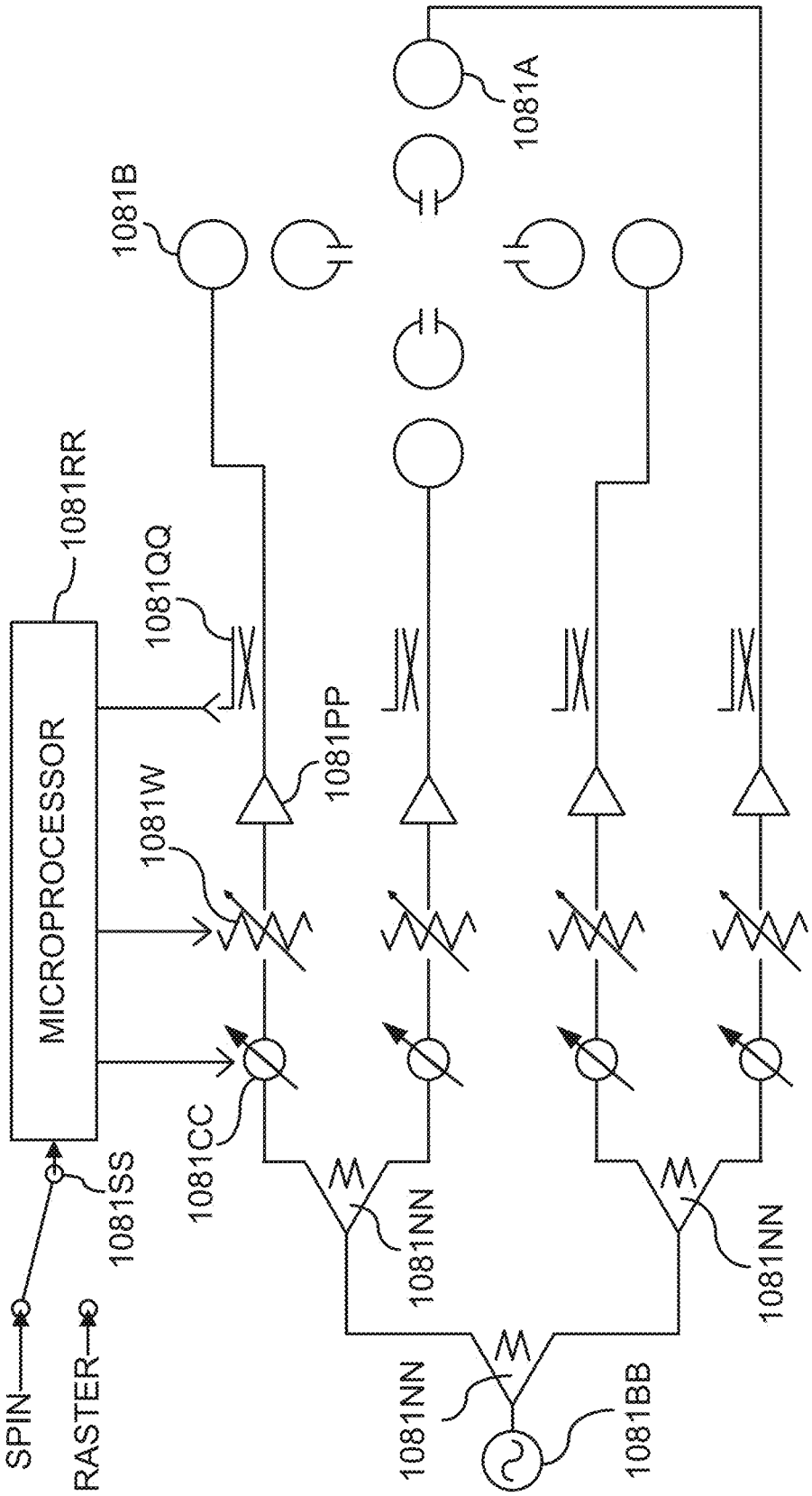
MICROPROCESSOR
1081RR
1081QQ
1081W
1081CC
1081SS
SPIN
RASTER
1081PP
1081B
1081A
1081NN
1081NN
1081NN
1081BB

FIG. 12D