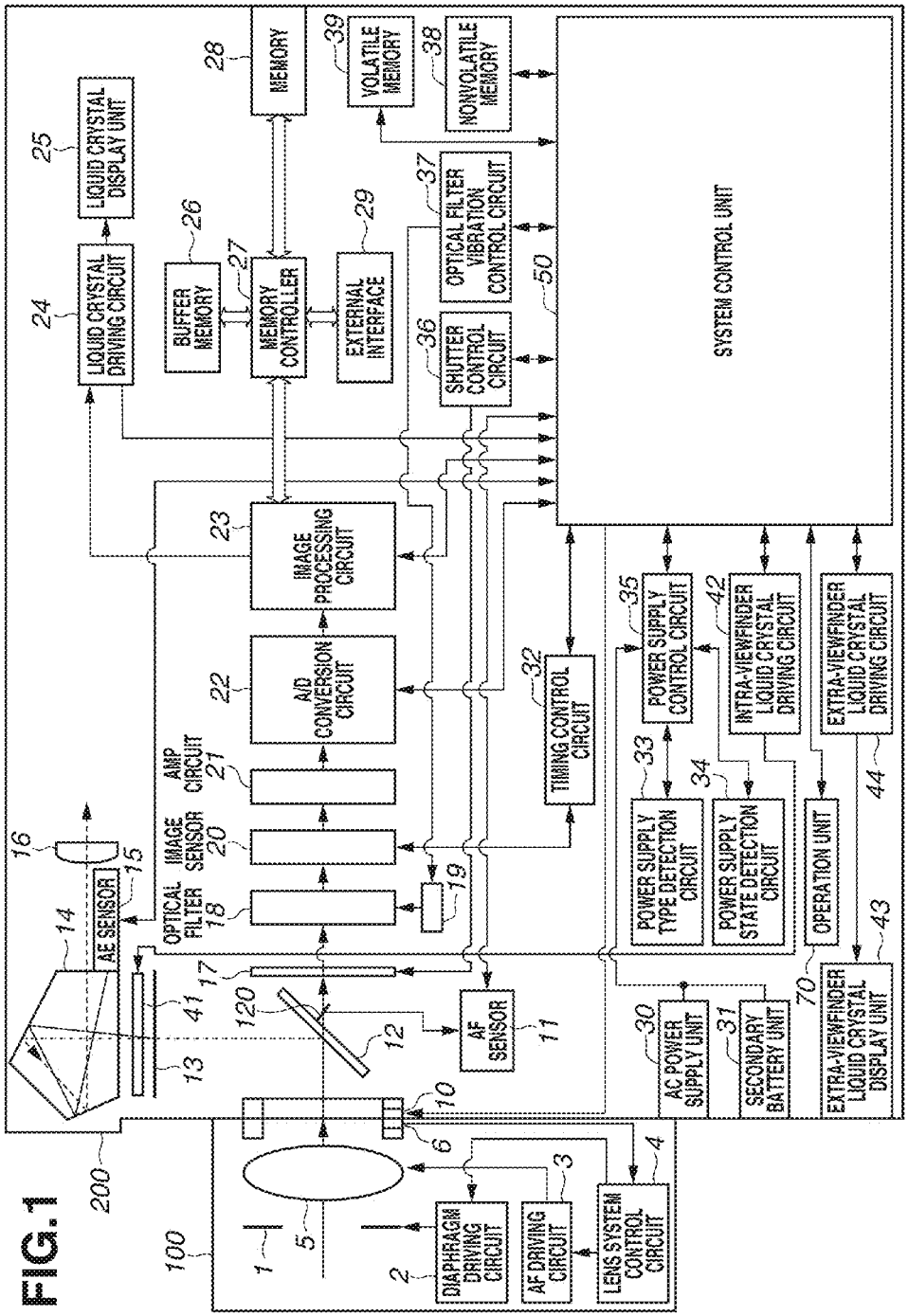
LIQUID CRYSTAL DISPLAY UNIT
LIQUID CRYSTAL DRIVING CIRCUIT
BUFFER MEMORY
MEMORY CONTROLLER
MEMORY
EXTERNAL INTERFACE
VOLATILE MEMORY
NONVOLATILE MEMORY
OPTICAL FILTER VIBRATION CONTROL CIRCUIT
SHUTTER CONTROL CIRCUIT
SYSTEM CONTROL UNIT
IMAGE PROCESSING CIRCUIT
A/D CONVERSION CIRCUIT
AMP CIRCUIT
IMAGE SENSOR
OPTICAL FILTER
AE SENSOR
TIMING CONTROL CIRCUIT
POWER SUPPLY CONTROL CIRCUIT
INTRA-VIEWFINDER LIQUID CRYSTAL DRIVING CIRCUIT
EXTRA-VIEWFINDER LIQUID CRYSTAL DRIVING CIRCUIT
POWER SUPPLY TYPE DETECTION CIRCUIT
POWER SUPPLY STATE DETECTION CIRCUIT
OPERATION UNIT
AF SENSOR
AC POWER SUPPLY UNIT
SECONDARY BATTERY UNIT
EXTRA-VIEWFINDER LIQUID CRYSTAL DISPLAY UNIT
DIAPHRAGM DRIVING CIRCUIT
AF DRIVING CIRCUIT
LENS SYSTEM CONTROL CIRCUIT

FIG.1