US 20210116377A1

(19) United States

(12) Patent Application Publication

Swager et al.

(10) Pub. No.: US 2021/0116377 A1

(43) Pub. Date: Apr. 22, 2021

(54) **WHITE LIGHT EMISSIVE SPECIES AND RELATED METHODS**

(71) Applicant: **C2Sense, Inc.**, Watertown, MA (US)

(72) Inventors: **Timothy Manning Swager**, Newton, MA (US); **Jason R. Cox**, Worcester, MA (US); **Robert Deans**, Grafton, MA (US); **Zhengguo Zhu**, Chelmsford, MA (US); **Brian E. Fratto**, Holden, MA (US); **Gabriel Davis**, Aliquippa, PA (US)

(73) Assignee: **C2Sense, Inc.**, Watertown, MA (US)

(21) Appl. No.: **17/073,229**

(22) Filed: **Oct. 16, 2020**

Related U.S. Application Data

(60) Provisional application No. 63/085,929, filed on Sep. 30, 2020, provisional application No. 63/069,544, filed on Aug. 24, 2020, provisional application No. 63/054,176, filed on Jul. 20, 2020, provisional application No. 62/916,331, filed on Oct. 17, 2019.

Publication Classification

(51) **Int. Cl.**

G01N 21/64	(2006.01)
C09K 11/06	(2006.01)
G01N 33/569	(2006.01)

(52) **U.S. Cl.**

CPC ***G01N 21/6428*** (2013.01); ***C09K 11/06*** (2013.01); ***G01N 33/56983*** (2013.01); ***G01N 21/645*** (2013.01); *C09K 2211/182* (2013.01); *C09K 2211/1007* (2013.01); *G01N 2021/6471* (2013.01); *C09K 2211/1044* (2013.01); *C09K 2211/1059* (2013.01); *C09K 2211/1092* (2013.01); *G01N 2333/165* (2013.01); *G01N 2021/6439* (2013.01); *C09K 2211/1029* (2013.01)

(57) **ABSTRACT**
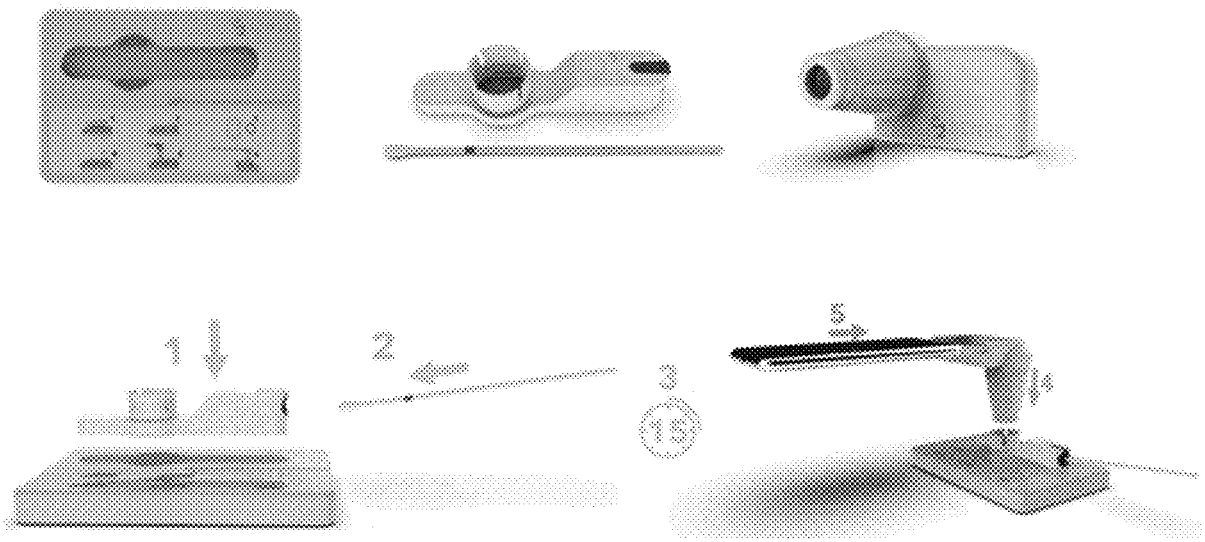
Embodiments described herein generally relate to: sensing and/or authentication using luminescence imaging; diagnostic assays, systems, and related methods; temporal thermal sensing and related methods; and/or to emissive species, such as those excitable by white light, and related systems and methods.