US 20210096577A1

(19) United States

(12) Patent Application Publication

Peret et al.

(10) Pub. No.: US 2021/0096577 A1

(43) Pub. Date: Apr. 1, 2021

(54) **USER CONTROL DEVICE FOR A TRANSPORTER**

(71) Applicants: **Bob D. Peret**, Bedford, NH (US); **Stewart M. Coulter**, Bedford, NH (US); **Dean Kamen**, Bedford, NH (US); **Derek G. Kane**, Manchester, NH (US)

(72) Inventors: **Bob D. Peret**, Bedford, NH (US); **Stewart M. Coulter**, Bedford, NH (US); **Dean Kamen**, Bedford, NH (US); **Derek G. Kane**, Manchester, NH (US)

(21) Appl. No.: **17/014,770**

(22) Filed: **Sep. 8, 2020**

Related U.S. Application Data

(63) Continuation of application No. 15/486,980, filed on Apr. 13, 2017, now Pat. No. 10,802,495.

(60) Provisional application No. 62/322,522, filed on Apr. 14, 2016.

Publication Classification

(51) **Int. Cl.**

G05D 1/02	(2006.01)
B60L 15/10	(2006.01)
A61G 5/10	(2006.01)
A61G 3/08	(2006.01)
A61G 5/06	(2006.01)

(52) **U.S. Cl.**

CPC ***G05D 1/0223*** (2013.01); *G01S 19/01* (2013.01); ***A61G 5/1059*** (2013.01); ***G05D 1/0274*** (2013.01); ***A61G 5/1051*** (2016.11); ***A61G 3/0808*** (2013.01); ***A61G 5/06*** (2013.01); ***A61G 5/061*** (2013.01); ***A61G 5/104*** (2013.01); ***A61G 5/1043*** (2013.01); ***A61G 5/1067*** (2013.01); ***G05D 1/0246*** (2013.01); ***G05D 1/0278*** (2013.01); *Y02T 90/16* (2013.01); *G05D 2201/0206* (2013.01); *A61G 2203/30* (2013.01); *Y02T 10/64* (2013.01); *A61G 2203/14* (2013.01); *A61G 2203/22* (2013.01); ***B60L 15/10*** (2013.01)

(57) **ABSTRACT**
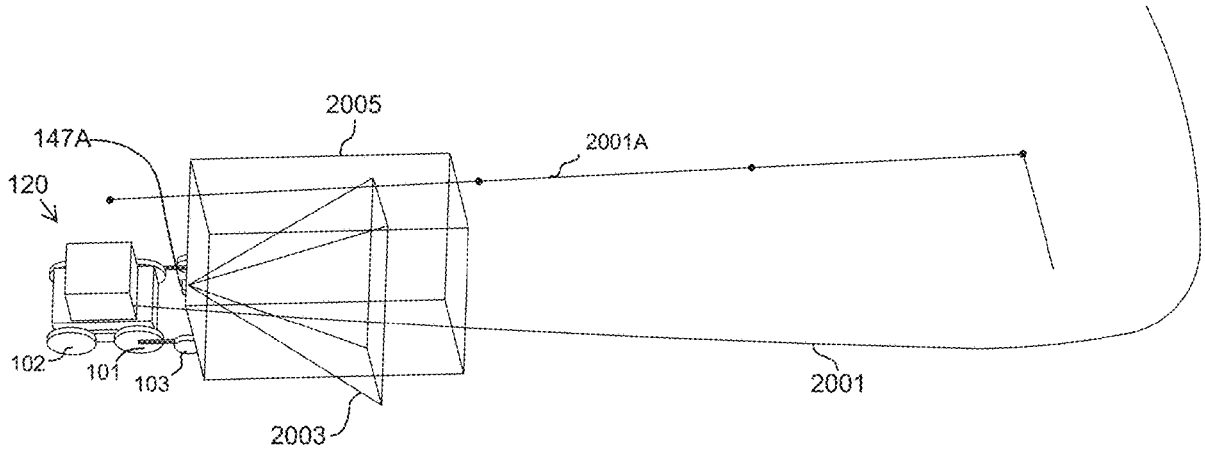
A user control device for a transporter. The user control device can communicate with the transporter via electrical interface(s) that can facilitate communication and data processing among the user interface device and controllers that can control the movement of the transporter. The user control device can perform automated actions based on the environment in which the transporter operates and the user's desired movement of the transporter. External applications can enable monitoring and control of the transporter.