US 20200278078A1

(19) United States

(12) Patent Application Publication

Janway et al.

(10) Pub. No.: US 2020/0278078 A1

(43) Pub. Date: Sep. 3, 2020

(54) **SYSTEM, METHOD, AND APPARATUS FOR CLAMPING**

(71) Applicant: **DEKA Products Limited Partnership**, Manchester, NH (US)

(72) Inventors: **Jeffrey M. Janway**, Hooksett, NH (US); **Larry B. Gray**, Merrimack, NH (US); **Matthew Richard Gill**, San Francisco, CA (US); **Richard J. Lanigan**, Concord, NH (US); **Thomas A. Friedrich**, Loudon, NH (US); **Stephen L. Fichera**, Salem, NH (US); **John M. Kerwin**, Manchester, NH (US); **Erik N. Sabin**, Manchester, NH (US); **Dean Kamen**, Bedford, NH (US)

(21) Appl. No.: **16/876,424**

(22) Filed: **May 18, 2020**

Related U.S. Application Data

(63) Continuation of application No. 15/782,451, filed on Oct. 12, 2017, now Pat. No. 10,655,779, which is a continuation of application No. 14/956,648, filed on Dec. 2, 2015, now Pat. No. 10,082,241, which is a continuation-in-part of application No. 14/137,562, filed on Dec. 20, 2013, now Pat. No. 9,808,572, which is a continuation-in-part of application No. 13/833,712, filed on Mar. 15, 2013, now Pat. No. 9,488,200, which is a continuation-in-part of application No. 13/333,574, filed on Dec. 21, 2011, now Pat. No. 10,453,157, which is a continuation-in-part of application No. PCT/US11/66588, filed on Dec. 21, 2011, which is a continuation-in-part of application No. 13/723,238, filed on Dec. 21, 2012, now Pat. No. 9,759,369, which is a continuation-in-part of application No. 13/333,574, filed on Dec. 21, 2011, now Pat. No. 10,453,157, which is a continuation-in-part of application No. PCT/US11/66588, filed on Dec. 21, 2011, said application No. 13/833,712 is a continuation-in-part of application No. 13/723,235, filed on Dec. 21, 2012, now Pat. No. 9,400,873, which is a continuation-in-part of application No. 13/333,574, filed on Dec. 21, 2011, now Pat. No. 10,453,157, which is a continuation-in-part of application No. PCT/US11/66588, filed on Dec. 21, 2011, said application No. 13/833,712 is a continuation-in-part of application No. PCT/US12/71131, filed on Dec. 21, 2012, said application No. PCT/US12/71131 is a continuation-in-part of application No. 13/333,574, filed on Dec. 21, 2011, now Pat. No. 10,453,157,

(Continued)

Publication Classification

(51) **Int. Cl.**

F16M 13/02	(2006.01)
H02G 11/00	(2006.01)
A61M 5/14	(2006.01)
A61M 39/28	(2006.01)
A61M 5/168	(2006.01)

(52) **U.S. Cl.**

CPC ***F16M 13/022*** (2013.01); ***H02G 11/00*** (2013.01); ***A61M 5/1414*** (2013.01); *F16B 2/06* (2013.01); ***A61M 39/28*** (2013.01); ***A61M 5/16813*** (2013.01); ***A61M 5/1415*** (2013.01)

(57) **ABSTRACT**
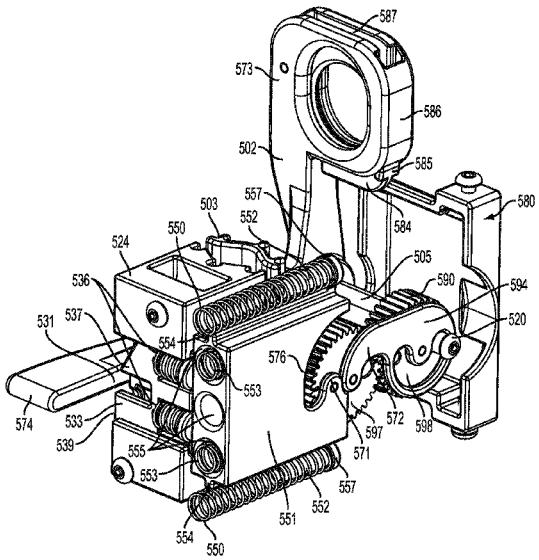
A clamp apparatus is disclosed that includes a body, first and second actuators, first, second, third and fourth gear sets, first and second movable grippers, and at least one leaf spring. The first gear set is coupled to the first actuator and the second gear set is coupled to the second actuator. The first gear set engages the second gear set. The first and second movable grippers are each operatively coupled to the body. The third gear set is coupled to the first movable gripper and the fourth gear set is coupled to the second movable gripper. The third gear set operatively engages the fourth gear set. The leaf spring engages with the third gear set and the fourth gear set to urge the first movable gripper and the second movable gripper toward a clamped position.