US 20210099778A1

(19) United States

(12) Patent Application Publication

(10) Pub. No.: US 2021/0099778 A1

(43) Pub. Date: Apr. 1, 2021

Hua et al.

(54) WINDSCREEN MESH

(71) Applicant: **Apple Inc.**, Cupertino, CA (US)

(72) Inventors: **Thanh P. Hua**, San Jose, CA (US); **Jarrett B. Lagler**, San Francisco, CA (US); **Brian R. Twehues**, San Jose, CA (US); **Ethan L. Huwe**, Campbell, CA (US); **Mei Zhang**, Cupertino, CA (US)

(21) Appl. No.: **16/901,937**

(22) Filed: **Jun. 15, 2020**

Related U.S. Application Data

(60) Provisional application No. 62/906,556, filed on Sep. 26, 2019.

Publication Classification

(51) **Int. Cl.**
H04R 1/02 (2006.01)

(52) **U.S. Cl.**
CPC ***H04R 1/02*** (2013.01); *H04R 2410/07* (2013.01)

(57) **ABSTRACT**
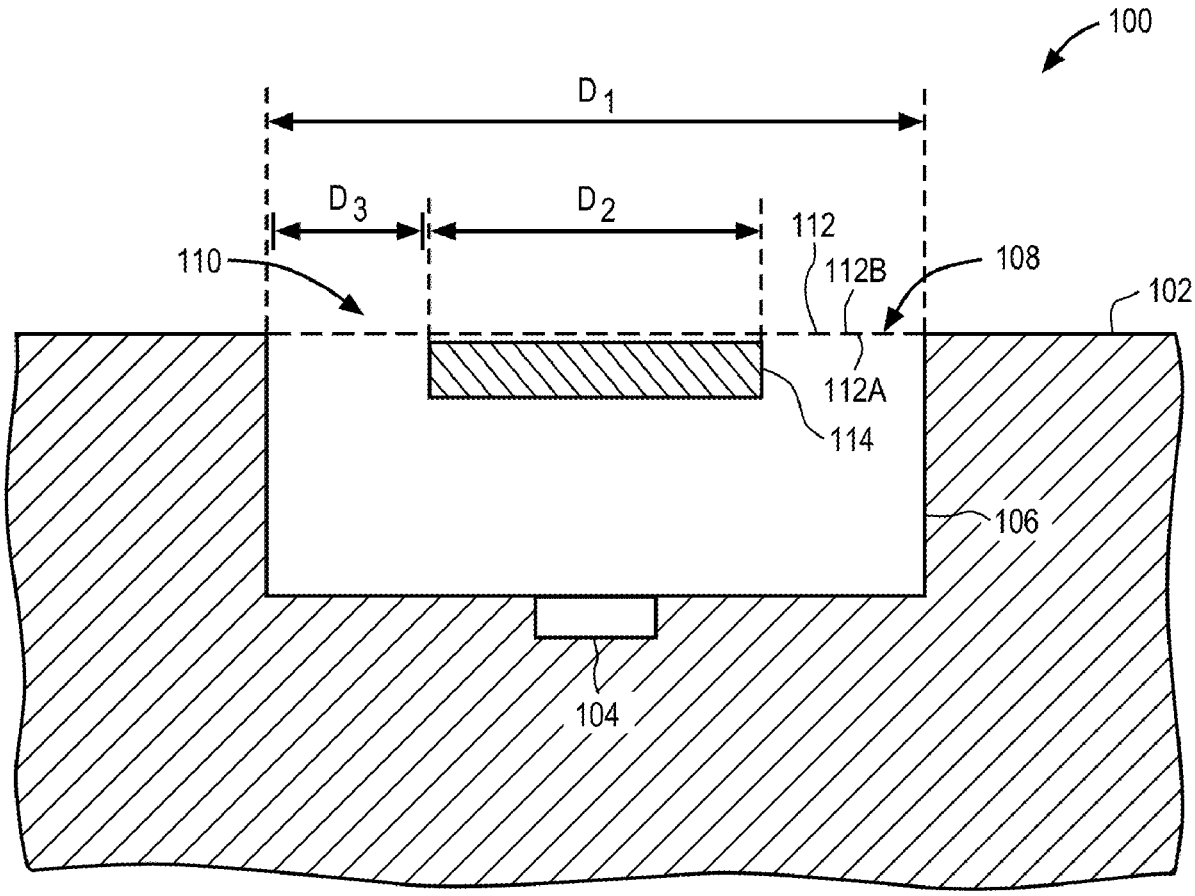
An acoustic mesh comprising a first portion that is acoustically closed; and a second portion that surrounds the first portion and is acoustically open, wherein a surface area of the second portion is at least one percent a total surface area of the acoustic mesh.