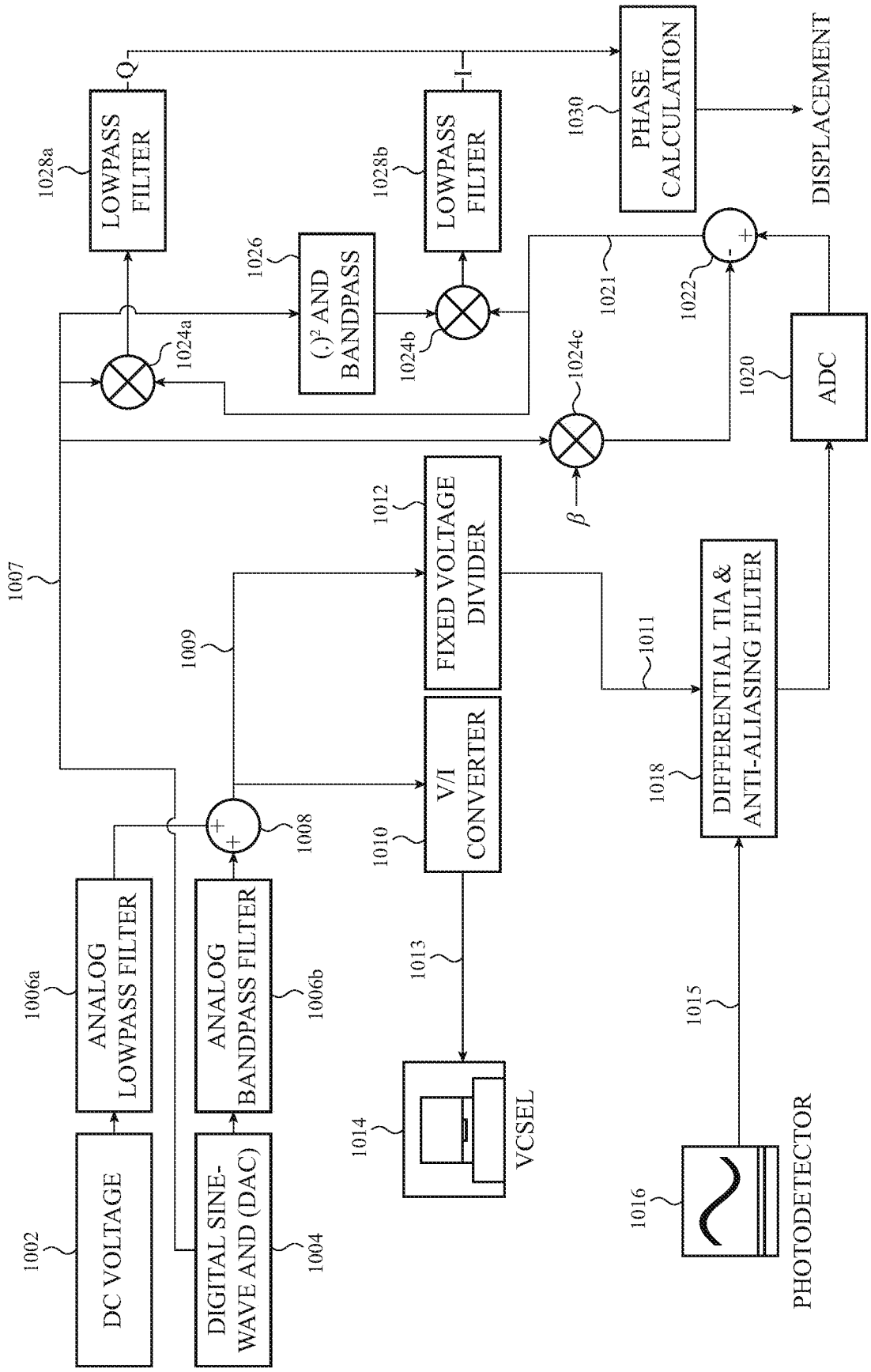
1002
DC VOLTAGE
1006a
ANALOG LOWPASS FILTER
1004
DIGITAL SINE-WAVE AND (DAC)
1006b
ANALOG BANDPASS FILTER
1008
1009
1007
1010
V/I CONVERTER
1012
FIXED VOLTAGE DIVIDER
1013
1014
VCSEL
1011
1015
1016
PHOTODETECTOR
1018
DIFFERENTIAL TIA & ANTI-ALIASING FILTER
1020
ADC
1022
1021
1024a
1024b
1024c
β
1026
(.)² AND BANDPASS
1028a
LOWPASS FILTER
Q
1028b
LOWPASS FILTER
I
1030
PHASE CALCULATION
DISPLACEMENT

*FIG. 10*