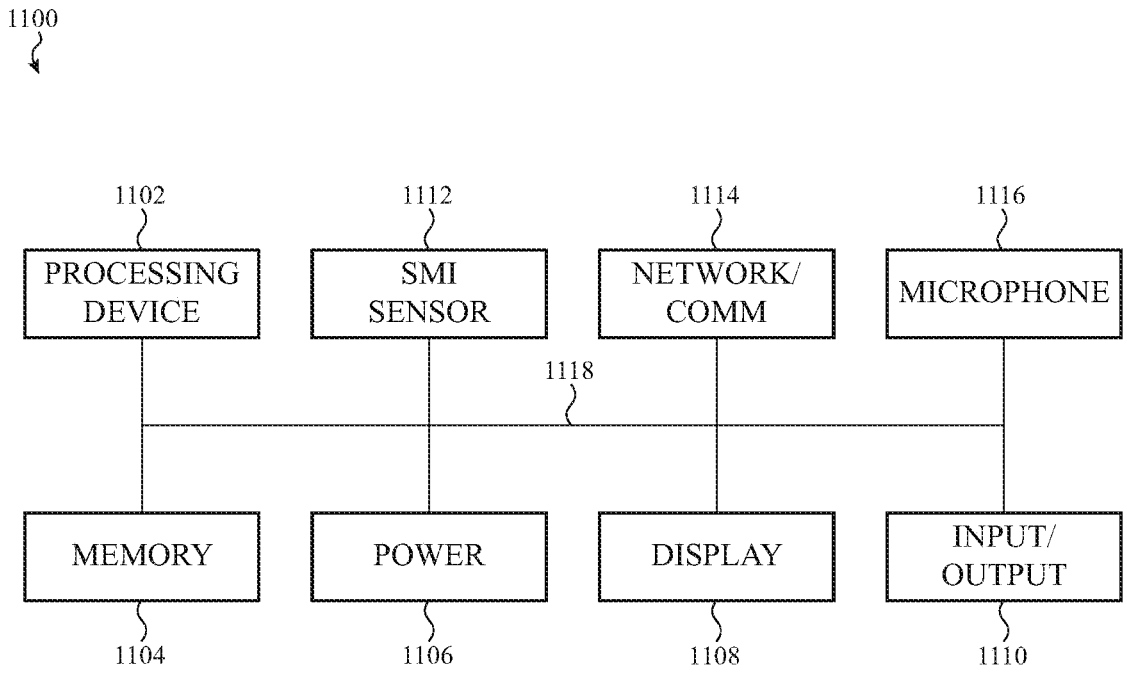
1100
1102
PROCESSING DEVICE
1112
SMI SENSOR
1114
NETWORK/ COMM
1116
MICROPHONE
1118
MEMORY
1104
POWER
1106
DISPLAY
1108
INPUT/ OUTPUT
1110

FIG. 11