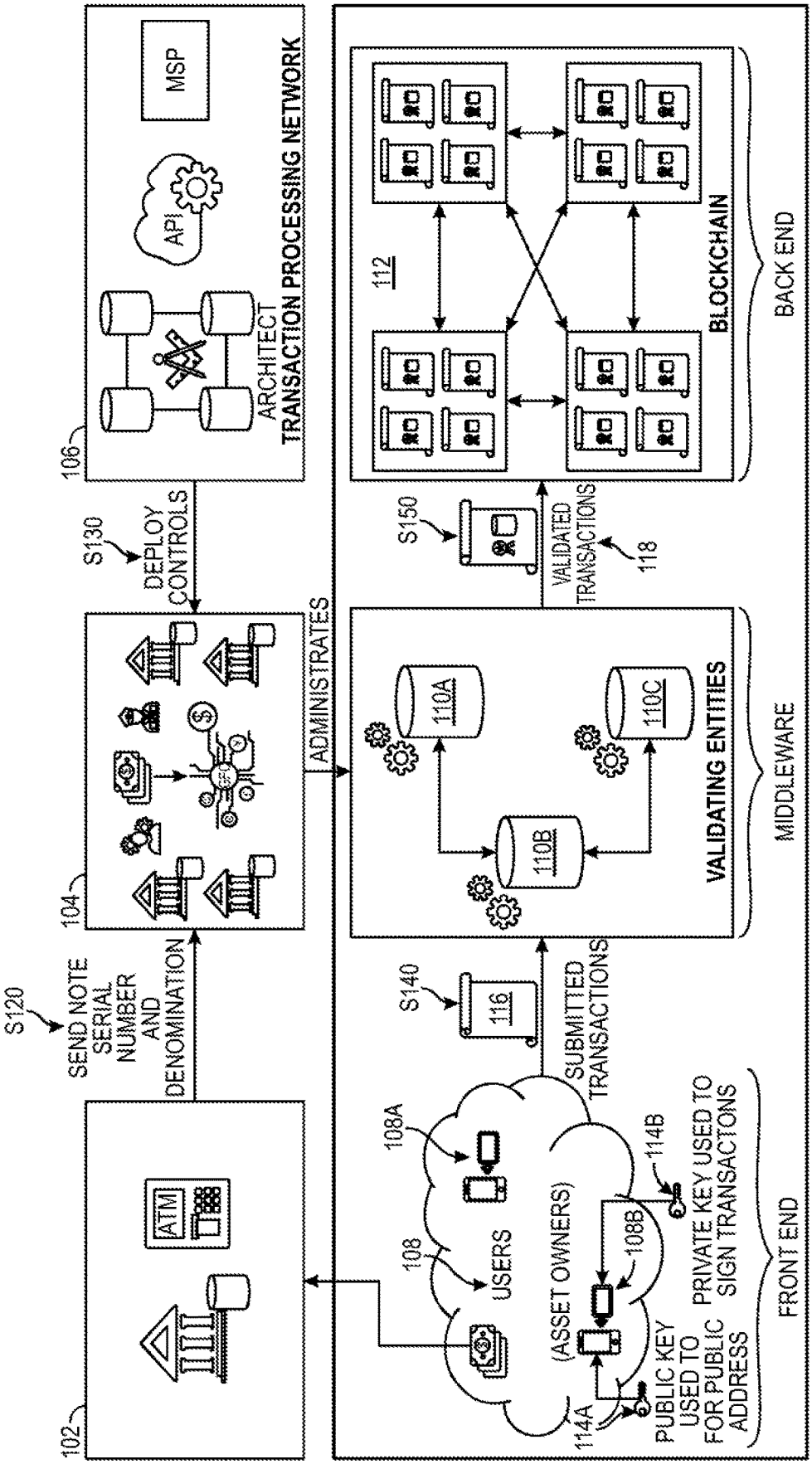
102
ATM
S120
SEND NOTE SERIAL NUMBER AND DENOMINATION
104
S130
DEPLOY CONTROLS
106
MSP
API
ARCHITECT TRANSACTION PROCESSING NETWORK
ADMINISTRATES
108
USERS
108A
(ASSET OWNERS)
108B
114A
PUBLIC KEY USED TO FOR PUBLIC ADDRESS
114B
PRIVATE KEY USED TO SIGN TRANSACTIONS
FRONT END
S140
116
SUBMITTED TRANSACTIONS
110A
110B
110C
VALIDATING ENTITIES
MIDDLEWARE
S150
VALIDATED TRANSACTIONS
118
112
BLOCKCHAIN
BACK END

FIG. 1